DOE Advanced TidGen® 2.0

D3.3 – Final Subsystem Design and Development Plan

DE-EE0007820

ORPC
OCEAN RENEWABLE
POWER COMPANY

April 30, 2018

The following presentation meets deliverable D3.3, for the Advanced TidGen®, which fulfills milestone M3.1 for the project:

Award No.:	DE-EE0007820, effective 11/1/2016
Project Title:	Advanced TidGen® Power System
Prime Recipient:	ORPC Maine
Principal Investigator:	Jarlath McEntee, P.E.

Milestone M3.1 (Q5): Mooring system and anchor design completed, with models demonstrating achievement of performance criteria, including stability during installation, operations and retrieval, mitigation strategies covering critical risks such as wave loading, debris, and cable loading and dynamics.

Major Deliverable(s):

- **D3.1:** Technical report on deployment and mooring system design requirements and subsystem risk analysis (Q3)
- **D3.2:** Technical report on mooring system design, supporting analytical models, and subsystem FMEA (Milestone M3.1) (Q4)
- **D3.3:** Presentation on all technical work performed, the final subsystem design, supporting analytical models, risk analysis and development plan (Q5)

ORPC
OCEAN RENEWABLE POWER COMPANY

Agenda
D3.3 - Final System Design

1. Project Overview
2. System Overview (Task 7)
3. Turbine Design (Tasks 1 & 2)
4. Chassis and Buoyancy Assembly (Task 3)
5. Mooring System (Task 3)
6. Deployment and Retrieval System (Task 3)
7. Driveline (Task 3)
8. Electrical and Control System (Task 4)

ORPC
OCEAN RENEWABLE POWER COMPANY

TidGen® 2.0 CDR – Continuation Application

Project Overview

ORPC
OCEAN RENEWABLE POWER COMPANY

Project Overview
Review of Project Goals

- Integrate technologies: high availability PTO generator and driveline, adaptive non-linear controls, BTMS
- Optimize turbine efficiency with current CFD advances
- Composite design optimization and life tests
- Rigorous production qualification and verification tests
- Innovative environmental monitoring, collaboration with Adaptive Management Team
- 2 month verification deployment in Cobscook Bay
- 12 month validation deployment in Western Passage
- DNV GL certification

ORPC
OCEAN RENEWABLE POWER COMPANY

Project Overview
Schedule, Budget & Milestones

Milestones / Achievements Status

- Critical Design Review (CDR) completed, with refined system architecture, cost estimates and performance predictions.
- CDR design and costs meet project LCOE target (<$0.80/kWh); Cp 44.1% for 29% improvement
- Deliverables:
  - D2.2 Composite characterization test report – *not submitted*, testing ongoing with static testing completed
  - D3.2 Technical report on mooring system design - *submitted*
- NCTE: BP1 ends 6/30 with continuation app by end of March; BP2 extends subsystem testing to Q2 2020

ORPC
OCEAN RENEWABLE POWER COMPANY

Advanced TidGen® Project Timeline

Contract Award
(Sep 2016)

ORPC selected for award negotiations

Contract signed Jan 2017, effective Nov 2016. Design work began Jan 2017.

Budget Period 1
(Jan 2017)

BP1: Design

Full system detail design and test planning:

- CDR in Dec 2017
- DOE continuation application in Mar 2018
- DOE approval in Jun 2018

Budget Period 2
(Jul 2018)

BP2: Build & Verify

Field testing:

- Turbine tow testing, Q4 2018, Cobscook Bay
- Anchors, Q2 2019, Western Passage
- Deployment subsystem, Q3 2019
- 2-month system installation, Q2 2020, Cobscook Bay

Budget Period 3
(Sep 2020)

BP3: Field Validation

12-month installation and operations in Western Passage, Q3 2020 to Q3 2021

Decommissioning
(Oct 2021)

Project complete Q1 2022

ORPC
OCEAN RENEWABLE POWER COMPANY

TidGen® 2.0 Power System

Baseline - Critical Design Review (CDR)

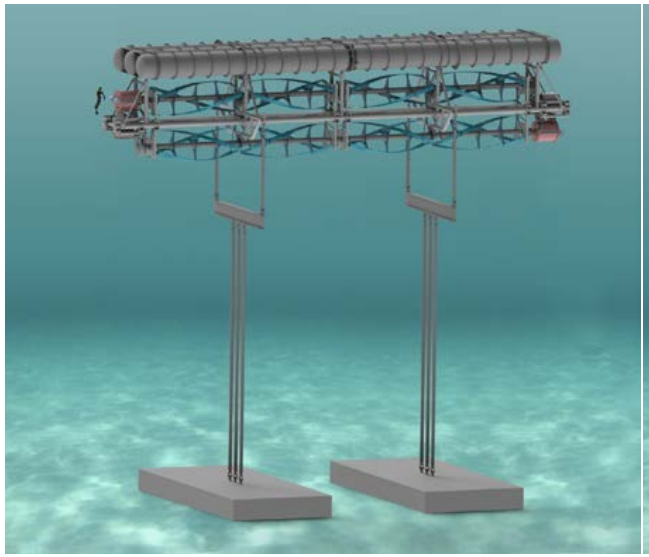

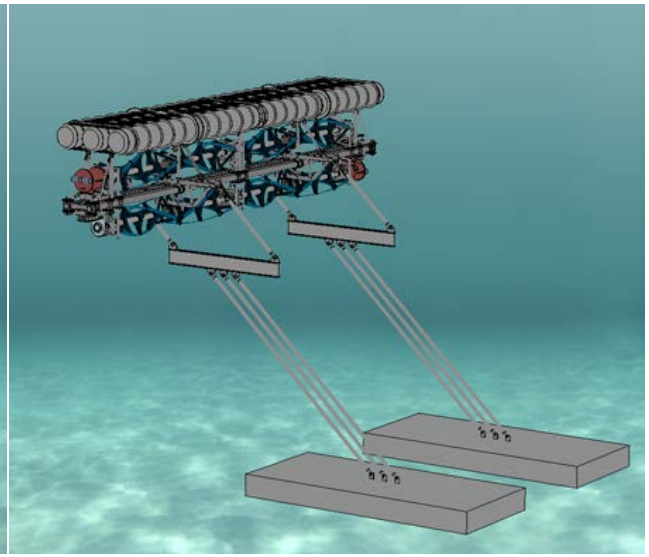

TidGen® 2.0 Device Specifications & Technologies

- Dimensions (approx.): 8.8m X 34.6m X 8.2m
- Rated Output at generator terminals: 260kW at 2.25m/s, 500kW at 3.0m/s
- High performing design with C_P 0.441
- System dry weight: 160,000kg (No anchors)
- Buoyant anchor weight:
    - 172,000kg per anchor (X2) Western Passage
  - *Primary drivers are turbine drag loads and low coefficient of friction*
  - *BP2 subsystem testing to begin with turbine barge testing for accurate load assessment, followed by design refinement and anchor evaluation to reduce overdesign, and deployment system to reduce operational risks*

ORPC
OCEAN RENEWABLE POWER COMPANY

TidGen® 2.0 CDR – Continuation Application

System Overview

ORPC
OCEAN RENEWABLE POWER COMPANY

System Overview

- Overall Length: 34.6m (112ft)
- Overall Height: 8.2m (27ft)
- Overall Width: 6.4m (21ft)
- Device Dry Weight: 140,000kg (310,000lb)

Turbine Size:

- 2.2m x 6.25m (7.2ft x 20.5ft)

Mooring System Dry Weight:

- 963,000kg (2,120,000lbs)

Western Passage Anchor Weight:

- 246,000kg (x2) (buoyant weight)
- 463,000kg (x2) (dry weight)

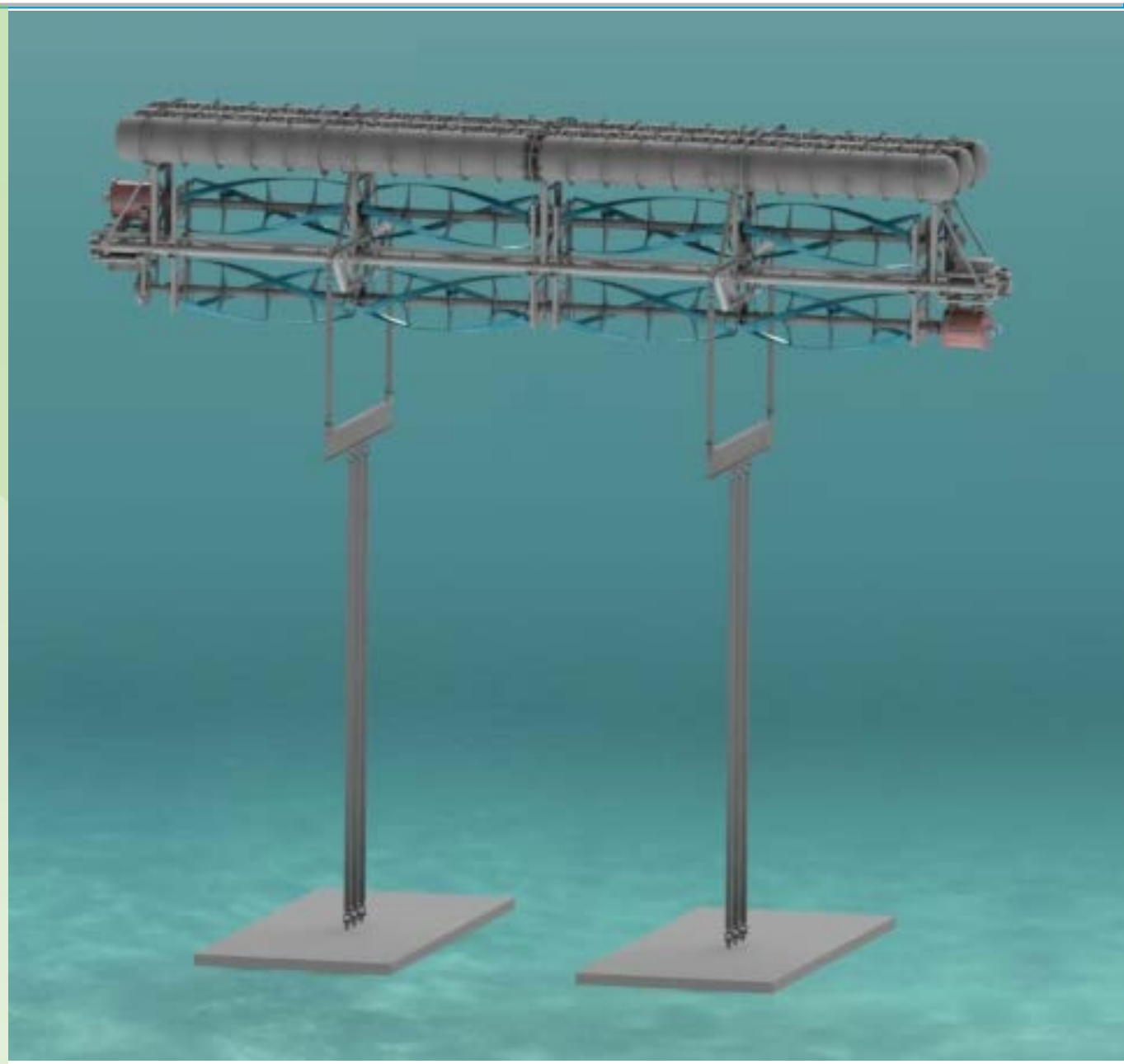

ORPC
OCEAN RENEWABLE POWER COMPANY

Advanced TidGen® Device

Jan. 2017

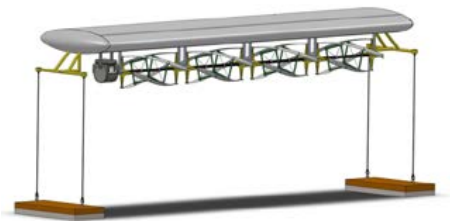

Jun. 2017

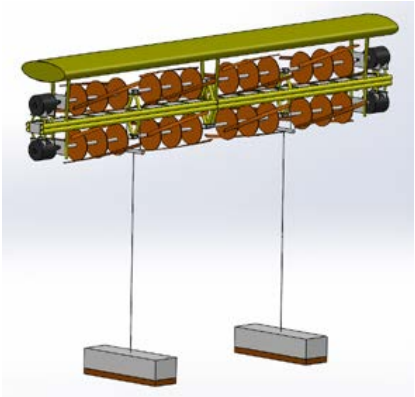

Sep. 2017

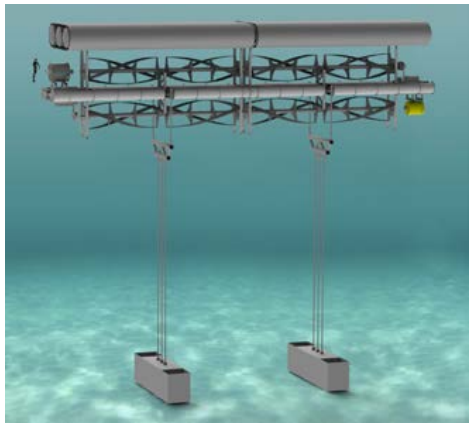

TidGen® 2.0 for Western Passage, December 2017 Design

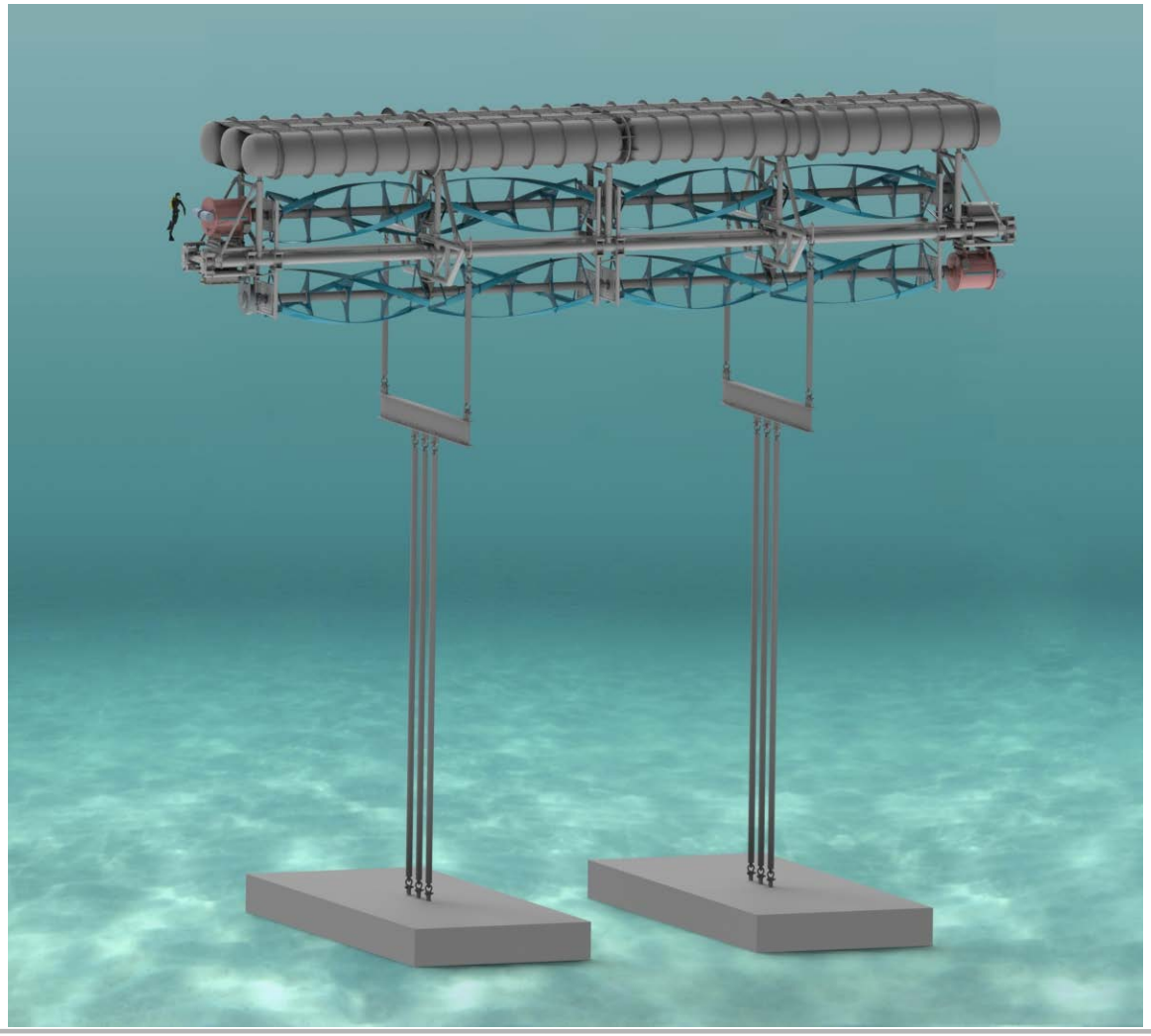

ORPC
OCEAN RENEWABLE
POWER COMPANY

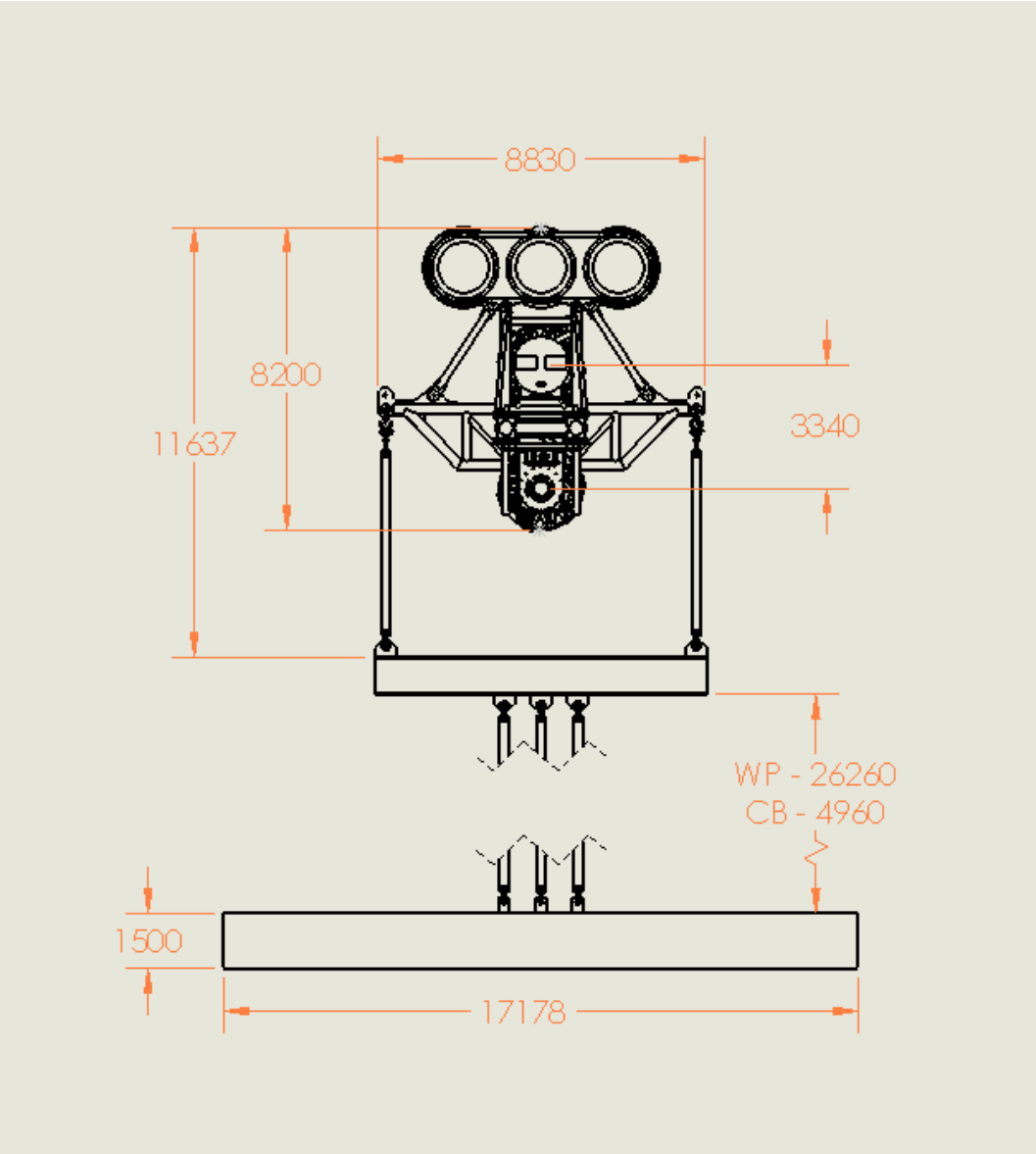

Turbine Diameter	- 2.2m
Number of Foils	- 3
Solidity	- 0.13
TSR, max power	- 2
TSR, freewheeling	- 3.5
At 2.25 m/s:	
RPM, peak power	- 39 RPM
RPM, freewheel	- 61 RPM
System weight	- 160,000kg
System dimensions	- 34.6x8.2x8.8m
Anchor weight	- 172,000kg
Anchor dimension	- 17.2x7.5x1.5m

ORPC
OCEAN RENEWABLE POWER COMPANY

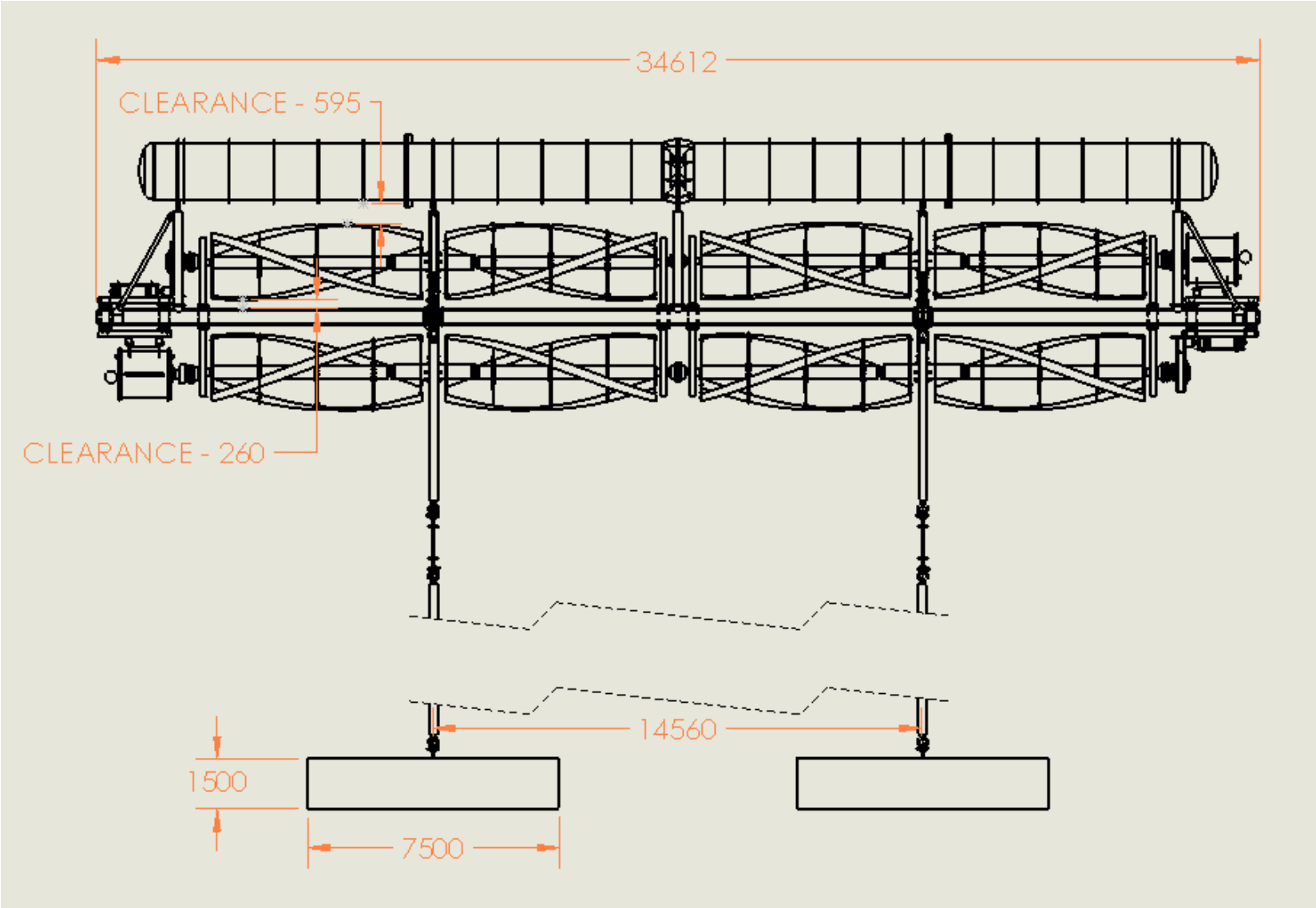

ORPC
OCEAN RENEWABLE
POWER COMPANY

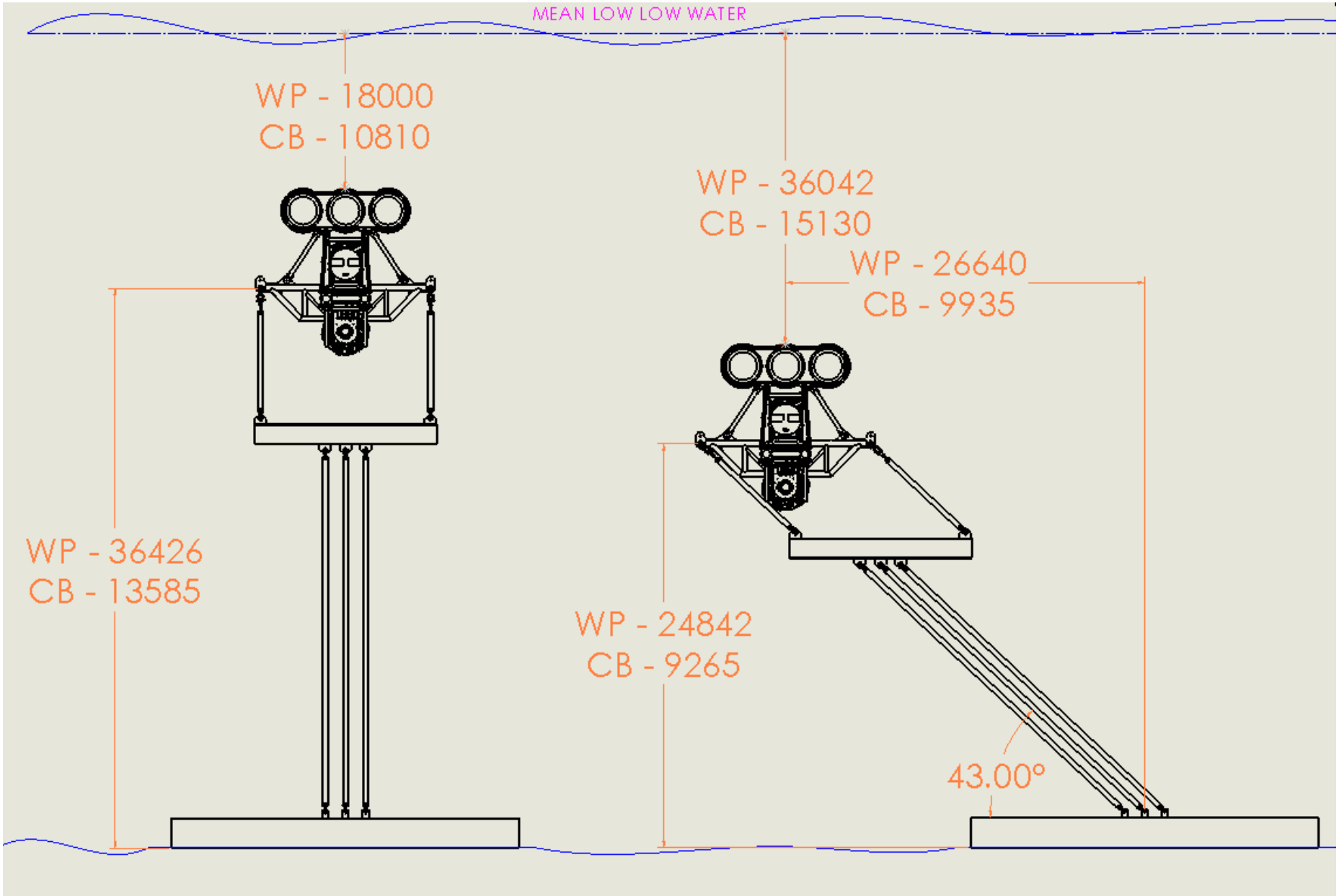

ORPC
OCEAN RENEWABLE
POWER COMPANY

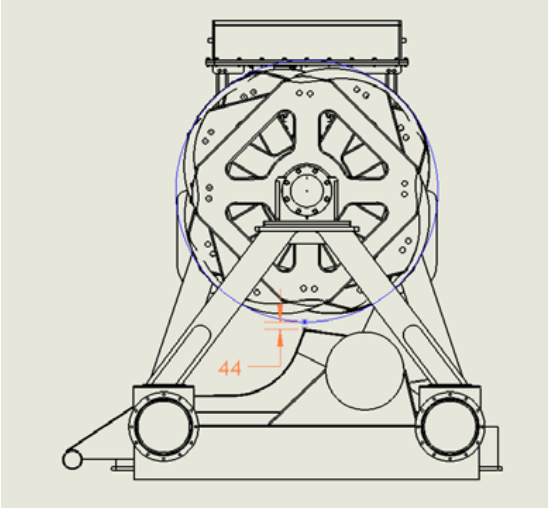

RivGen® 1.F

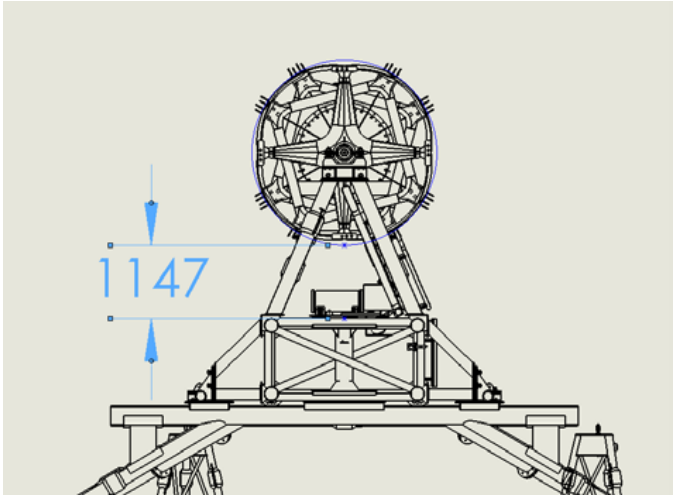

TidGen® 1.0

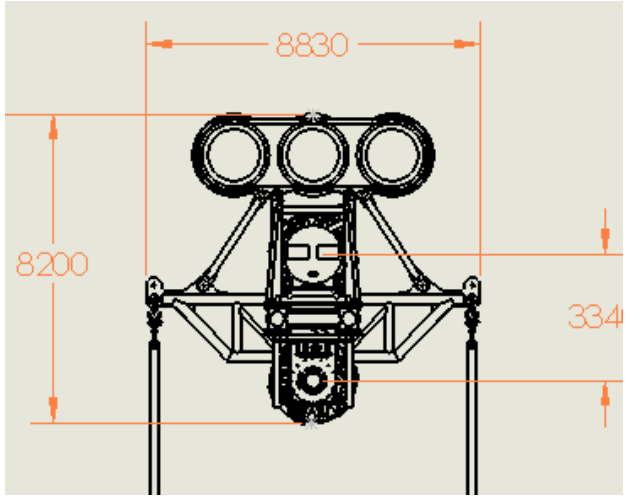

TidGen® 2.0

	RivGen® 1.F	TidGen® 1.0	TidGen® 2.0
Turbine Clearance	44mm	1147mm	260mm
Turbine Solidity	0.174	0.142	0.130
RPM, max pwr, 2.25 m/s	57.3	30.7	39.1
RPM, Freewheel	100.3	53.7	60.8

ORPC
OCEAN RENEWABLE
POWER COMPANY

TidGen 2.0 Field Testing

- Barge tow testing, Q4 2018
  - 1 month testing in Cobscook Bay
  - Verify first turbine system production as part of composites development
  - Verify driveline design
  - Tow test for accurate performance and loading to refine design models and reduce overdesign in structure, weight
  - Planning in process

ORPC
OCEAN RENEWABLE POWER COMPANY

TidGen 2.0 Field Testing

- Anchor evaluation, Q2 2019
  - 1 month testing in Western Passage
  - Scale model anchor to assess seabed conditions and anchor efficiency towards final full-scale design
  - Reviewing existing geophysical surveys of Western Passage

ORPC
OCEAN RENEWABLE POWER COMPANY

TidGen 2.0 Field Testing

- Deployment subsystem, Q3-Q4 2019
  - 1 month testing in Cobscook Bay
  - Address critical assembly for modularity and alignment
  - Assess launch operations
  - Finalize external equipment requirements for deployment rig

ORPC
OCEAN RENEWABLE POWER COMPANY

TidGen® 2.0 CDR – Continuation Application

Turbine Design – Tasks 1 & 2

ORPC
OCEAN RENEWABLE POWER COMPANY

Overview:

- Hydrodynamic Turbine Analysis
  - 2D CFD – LExCoSS
  - 3D CFD
- Structural Turbine Design
  - Turbine Design Overview - CDR
- Composite Testing Program
  - MSU Coupon testing

ORPC
OCEAN RENEWABLE
POWER COMPANY

Hydrodynamic Turbine Loads

Cp estimates:

2D estimate – 40.0%

2D LExCoSS post processed

3D estimate – 48.1%

Single 3D turbine with counter rotating est. improvement of 33.7%

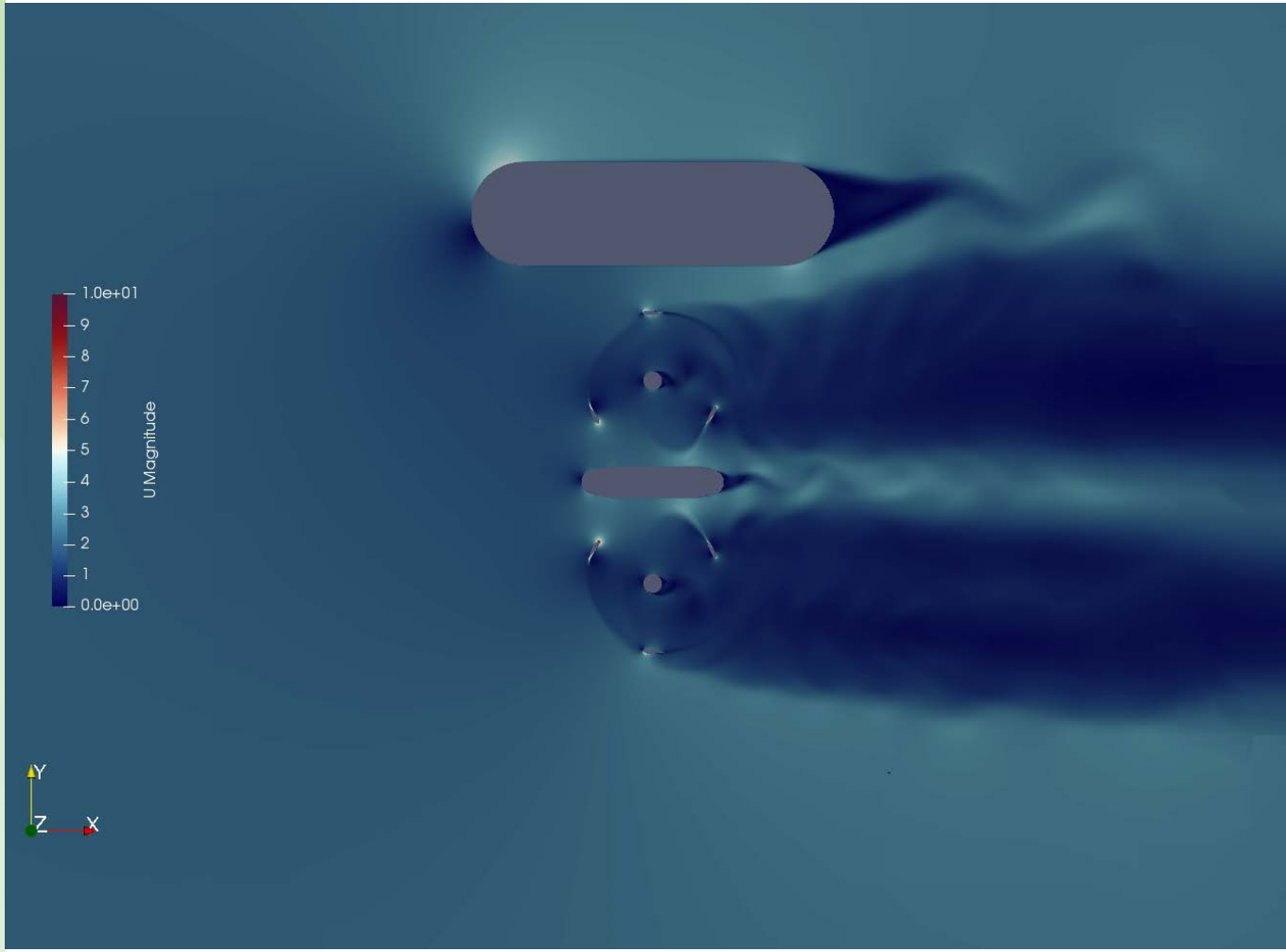

ORPC
OCEAN RENEWABLE
POWER COMPANY

3D CFD - OpenFOAM

Ongoing efforts with 3D CFD

Purpose:

- Get more accurate performance data
- Understand axial loads
- Calculate end effects

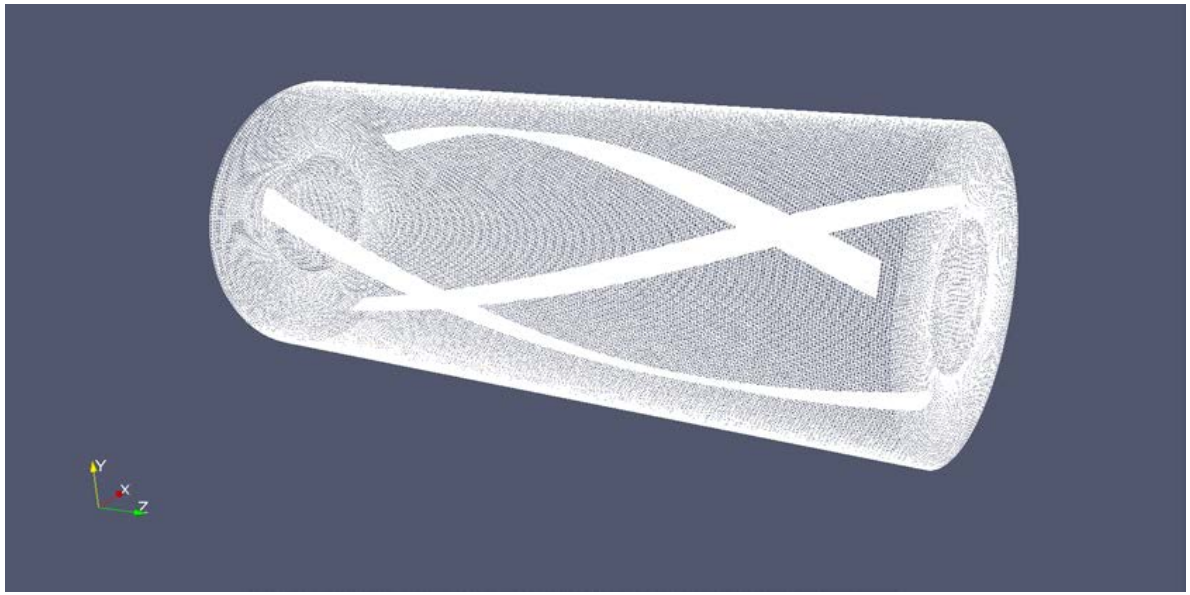

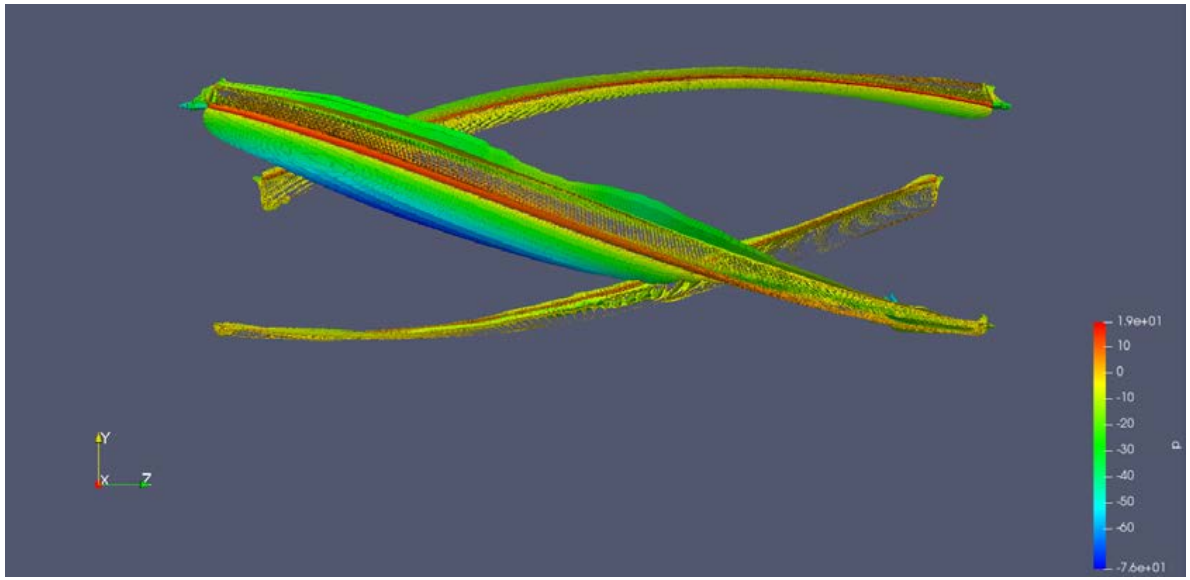

Source: M Wilson

ORPC
OCEAN RENEWABLE
POWER COMPANY

V. Analysis Overview

ORPC
OCEAN RENEWABLE
POWER COMPANY

Analysis Overview

Design Standards Used

DNVGL-ST-0164 – Section 6 Load and Resistance Factors

DNVGL-ST-0164 – Section 7.8.2.4 Simplified Calculation Method

ASTM D3039 – Tensile Testing of Composites

ASTM D3410 – Compression Testing of Composites

DNVGL-OS-C101 – Design of Offshore Steel Structures (Welding)

Standards to be used in budget period 2

DNVGL-ST-0164 – Section 7.8.2.2 Composite Qualification
DNVGL-OS-C501 – Composite Components

ORPC
OCEAN RENEWABLE
POWER COMPANY

Analysis Overview

Analysis Overview – Tangential Load

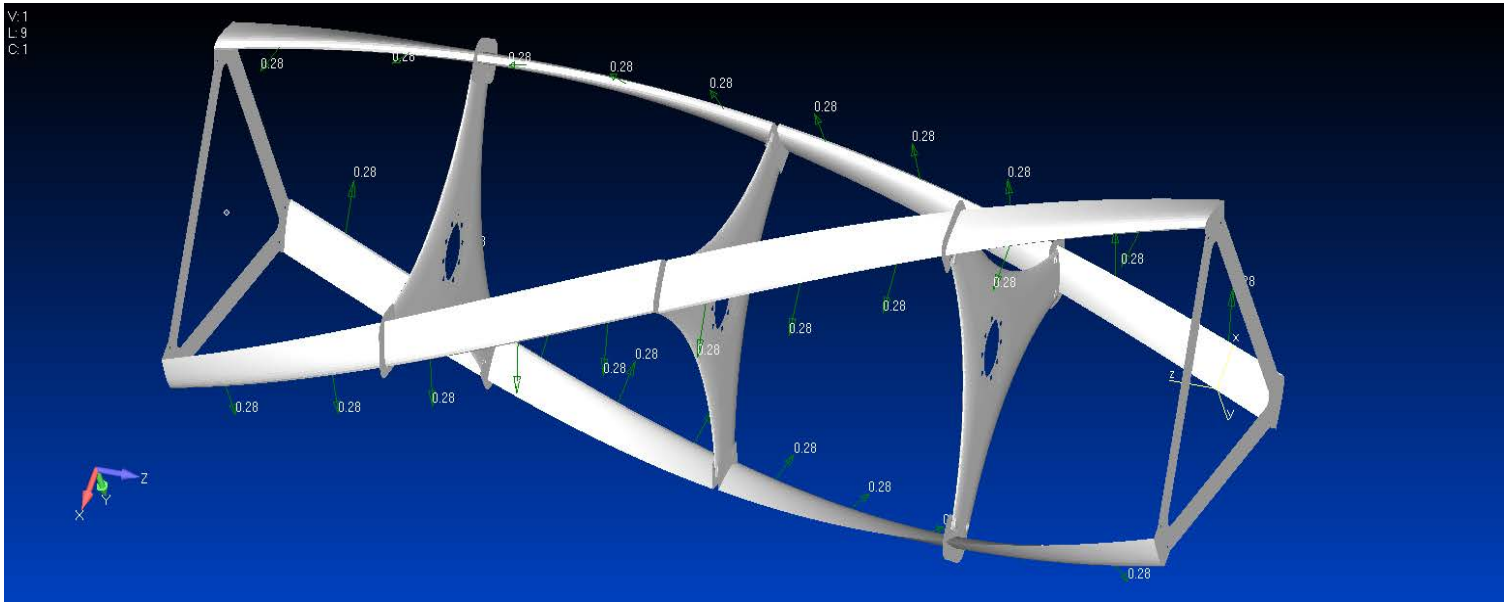

Tangential pressure as line load applied to the leading edge.

ORPC
OCEAN RENEWABLE
POWER COMPANY

Analysis Overview

Analysis Overview – Normal (Radial) Load

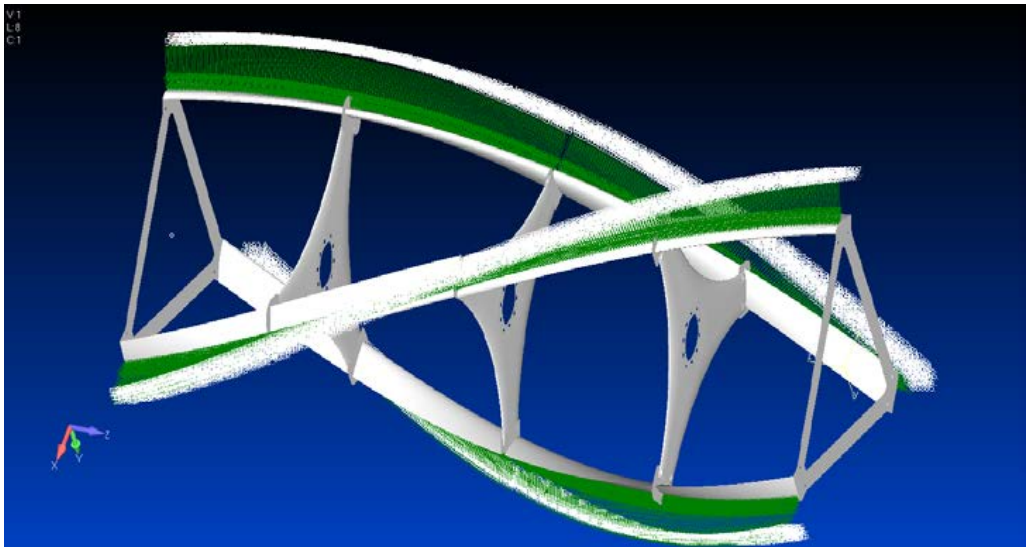

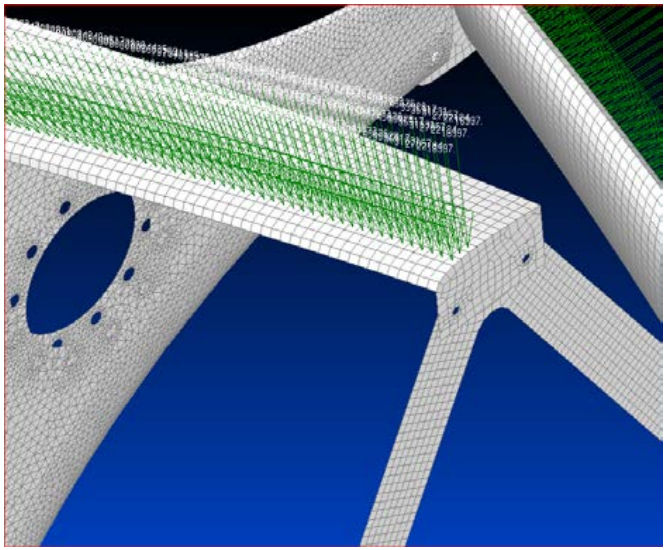

- Radial Pressure load over 3 chordwise elements (0.0225m chordwise each) approximately at the 1/4 cord,
- Applied pressure PR=PR(z) * 0.3/(3*0.0225) = PR(z)*(4.44) as the multiplier,
- Negative pressure is radially inward it is applied as a pressure to the outer surface PR(z)*(-4.44) to get inward force.

ORPC
OCEAN RENEWABLE
POWER COMPANY

Analysis Overview

Analysis Overview – Axial Load

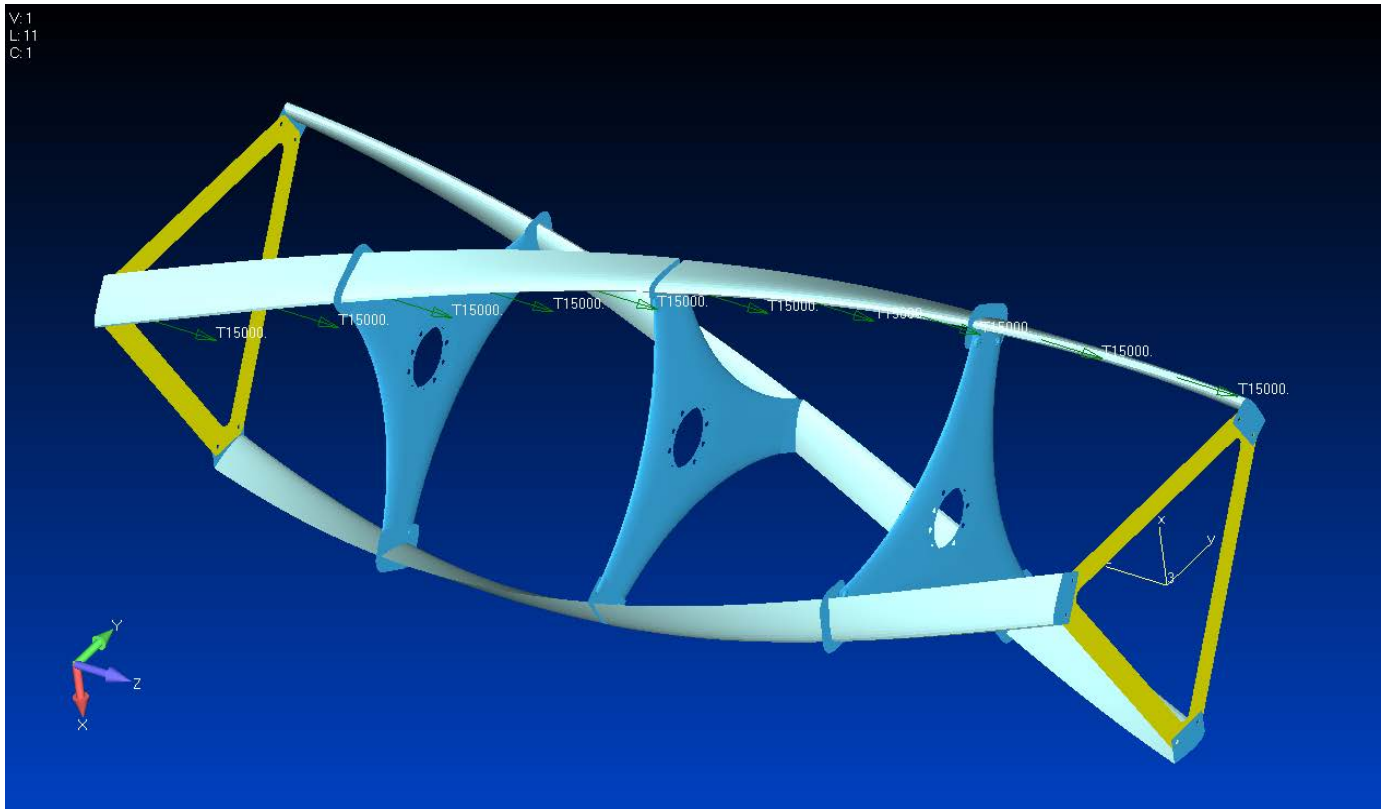

Maximum foil axial load is taken as 10% of the maximum single foil normal load of 150,000N, yielding 15,000N, applied as a line load on the foil leading edge.

ORPC
OCEAN RENEWABLE
POWER COMPANY

Analysis Overview

Critical Results: Analysis #1

X-Direction strain – underside view

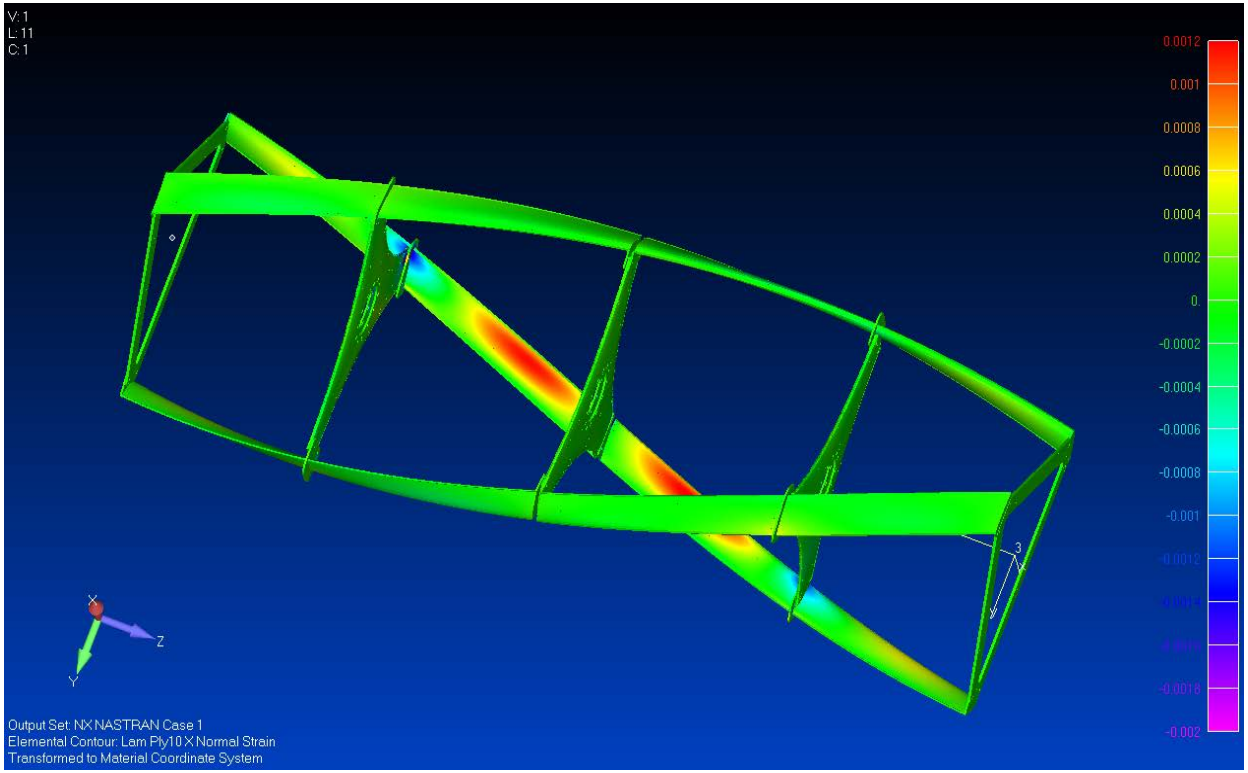

ORPC
OCEAN RENEWABLE
POWER COMPANY

Analysis Overview

Critical Results: Analysis #1

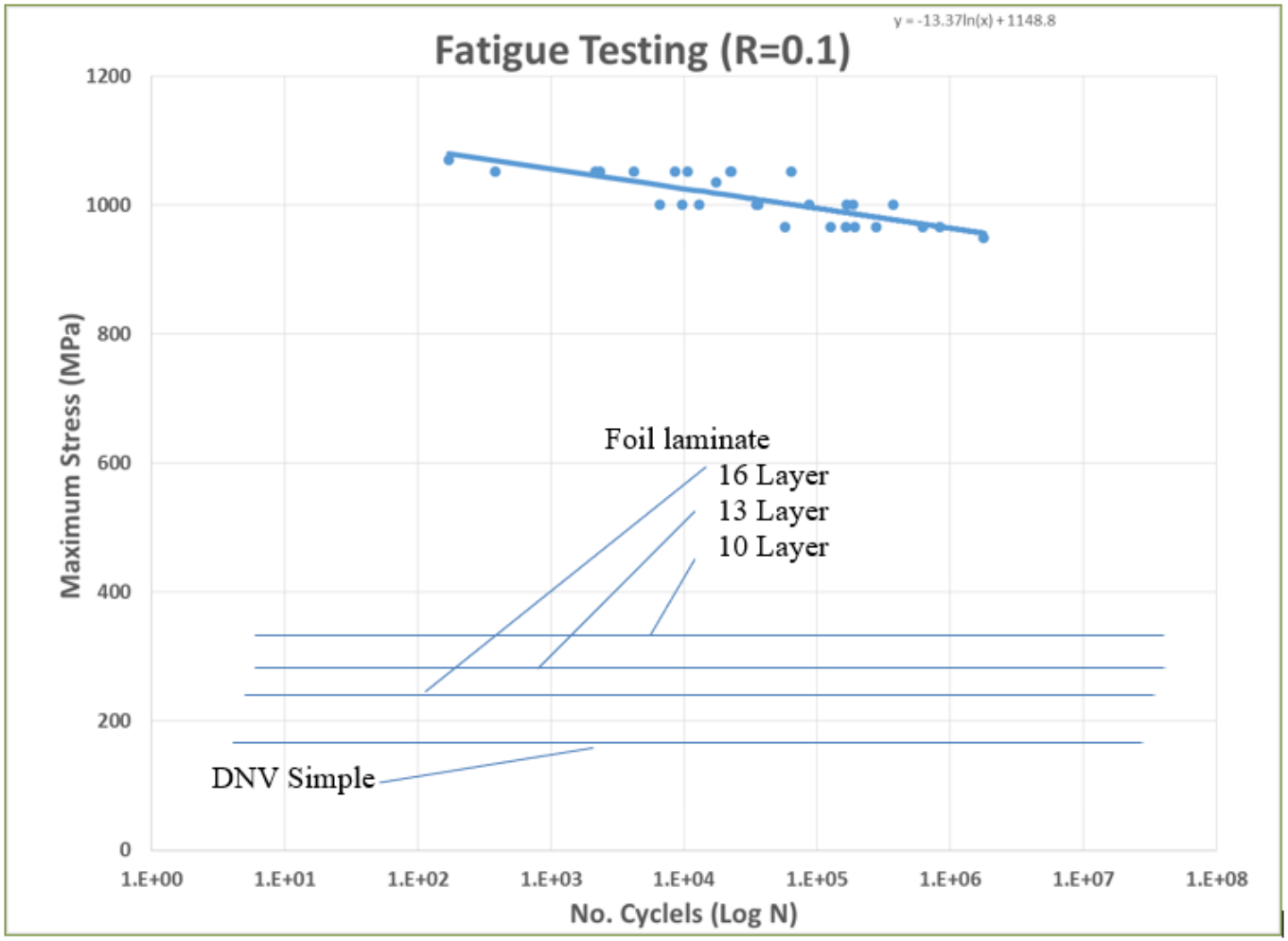

ORPC
OCEAN RENEWABLE
POWER COMPANY

Subsystem Overview

Dimensions

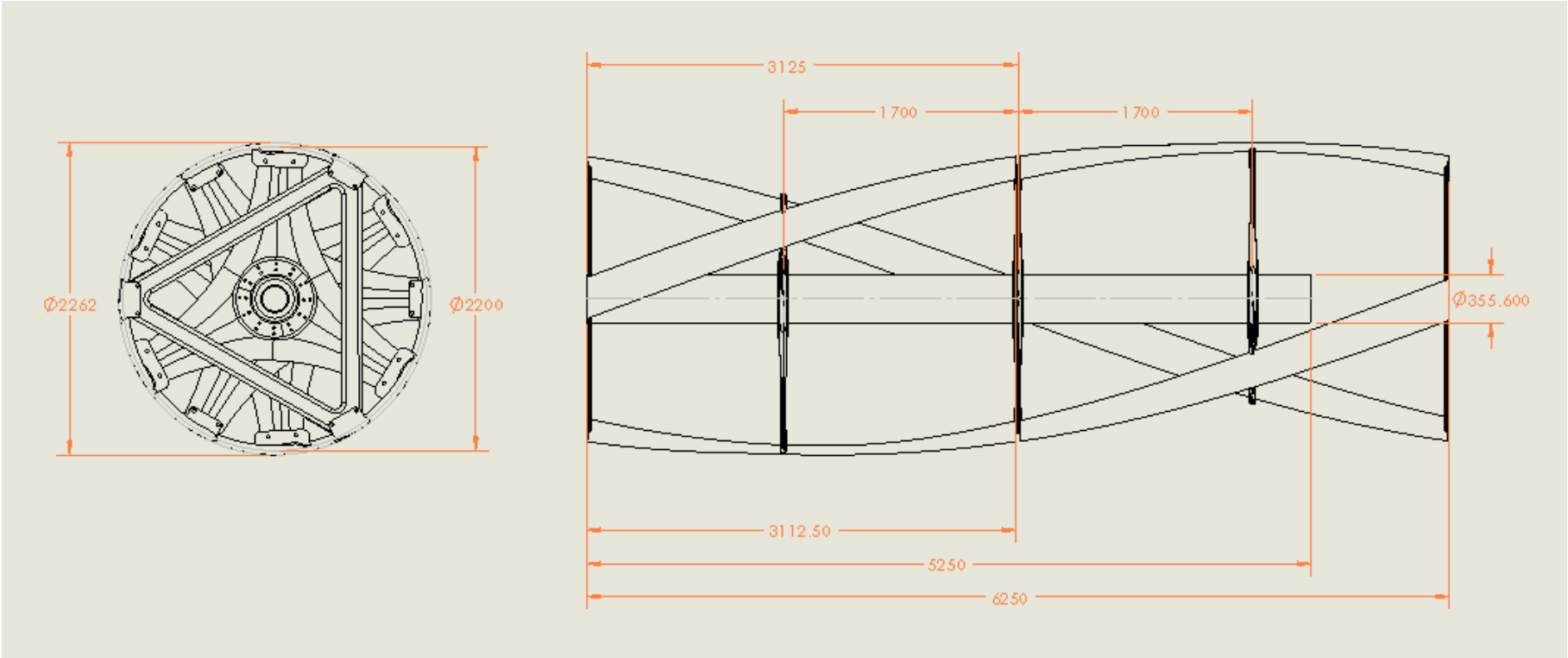

ORPC
OCEAN RENEWABLE
POWER COMPANY

Subsystem Cost

Estimated fabrication cost:

$55,000 - $75,000 per turbine

First build:
Qty = 1

Production build:
Qty = 7

TidGen® 2.0 requires 8 turbines:

$440,000 - $600,000 per system

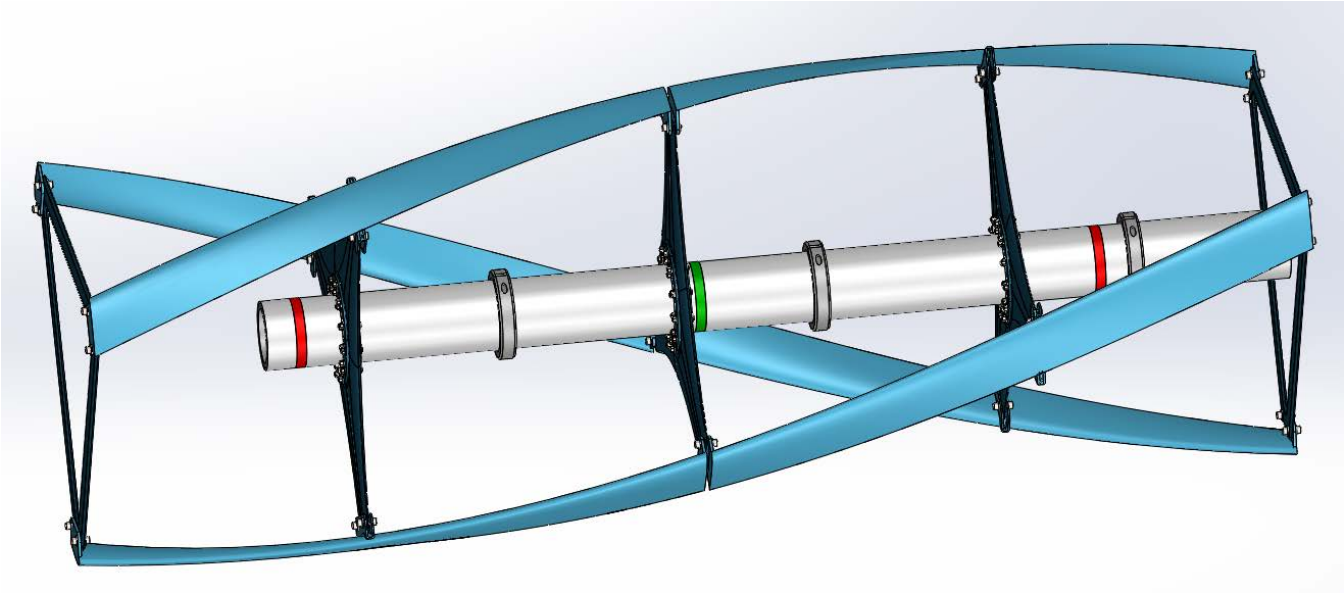

ORPC
OCEAN RENEWABLE
POWER COMPANY

TidGen® 2.0 CDR – Continuation Application

Chassis, Buoyancy and Structural Assembly – Task 3

ORPC
OCEAN RENEWABLE POWER COMPANY

Subsystem Overview

Subsystem Components

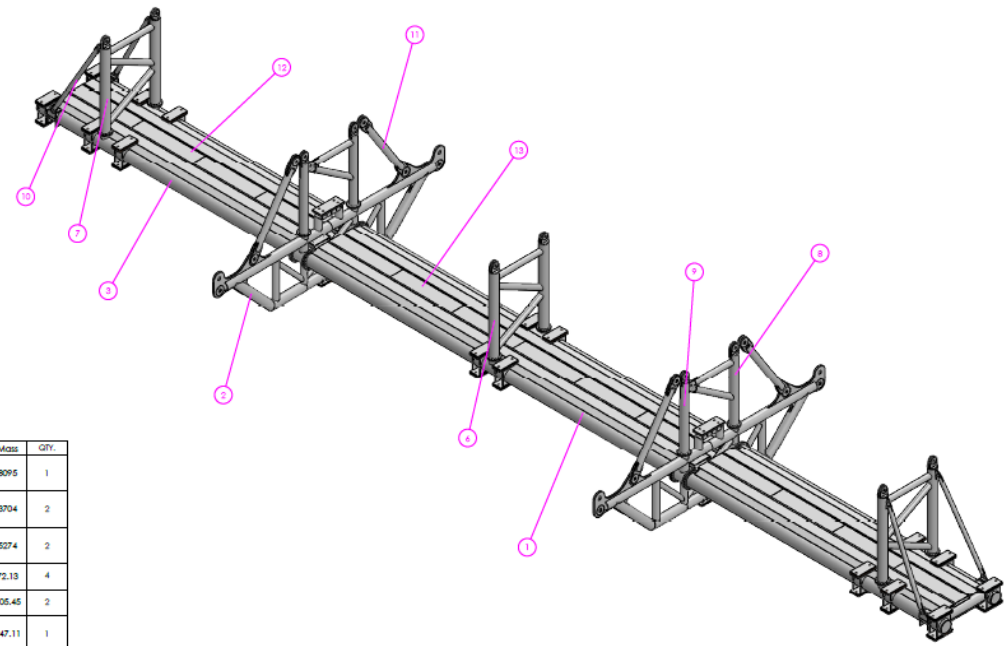

ITEM NO.	PART NUMBER	DESCRIPTION	Material	Mass	QTY.
1	A-TD20-10086 - Core Chassis Frame - MIDDLE	CORE CHASSIS FRAME - MIDDLE	ASTM A500 [TUBE] GRADE B	8095	1
2	A-TD20-10078 - Chassis Mooring Mount	CHASSIS MOORING MOUNT	ASTM A500 [TUBE] GRADE B	3704	2
3	A-TD20-10085 - Core Chassis Frame - END	CORE CHASSIS FRAME - END	ASTM A500 [TUBE] GRADE B	5274	2
4	P-TD20-10067 - Chassis Fairing Bottom Panel 01	CHASSIS FAIRING BOTTOM PANEL 01	HDPE	72.13	4
5	P-TD20-10090 - Chassis Fairing Bottom Panel 02	CHASSIS FAIRING BOTTOM PANEL 02	HDPE	105.45	2
6	A-TD20-10080 - Chassis BP Connection Frame 01	CHASSIS BP CONNECTION FRAME 02	ASTM A500 [TUBE] GRADE B	747.11	1
7	A-TD20-10080 - Chassis BP Connection Frame 01	CHASSIS BP CONNECTION FRAME 01	ASTM A500 [TUBE] GRADE B	753.23	2
8	A-TD20-10082 - Chassis BP Connection Frame 03	CHASSIS BP CONNECTION FRAME 03	ASTM A500 [TUBE] GRADE B	479.83	2
9	A-TD20-10083 - Chassis BP Connection Frame 04	CHASSIS BP CONNECTION FRAME 04	ASTM A500 [TUBE] GRADE B	357.70	2
10	P-TD20-10084 - Generator Support Spar	GENERATOR SUPPORT SPAR	ASTM A500 [TUBE] GRADE B	92	4
11	P-TD20-10079 - Mooring Support Spar	MOORING SUPPORT SPAR	ASTM A500 [TUBE] GRADE B	224	4
12	P-TD20-10088 - Chassis Fairing Top Panel 01	CHASSIS FAIRING TOP PANEL 02	ASTM A709 GRADE 36T2	46.39	16
13	P-TD20-10088 - Chassis Fairing Top Panel 01	CHASSIS FAIRING TOP PANEL 01	ASTM A709 GRADE 36T2	46.03	12

Critical Changes Since PDR:

- Increased reliance on BP for “assisted” rigidity
- Separation of driveline stanchions and BP connection frames
- Removal of “strap-on” buoyancy
- Reduced “height”
- Increased width for stiffness
- Raised mooring connection frame to center of drag
- Increased mooring connection frame span to mitigate chain interference

ORPC OCEAN RENEWABLE POWER COMPANY

Subsystem Overview

Subsystem Components

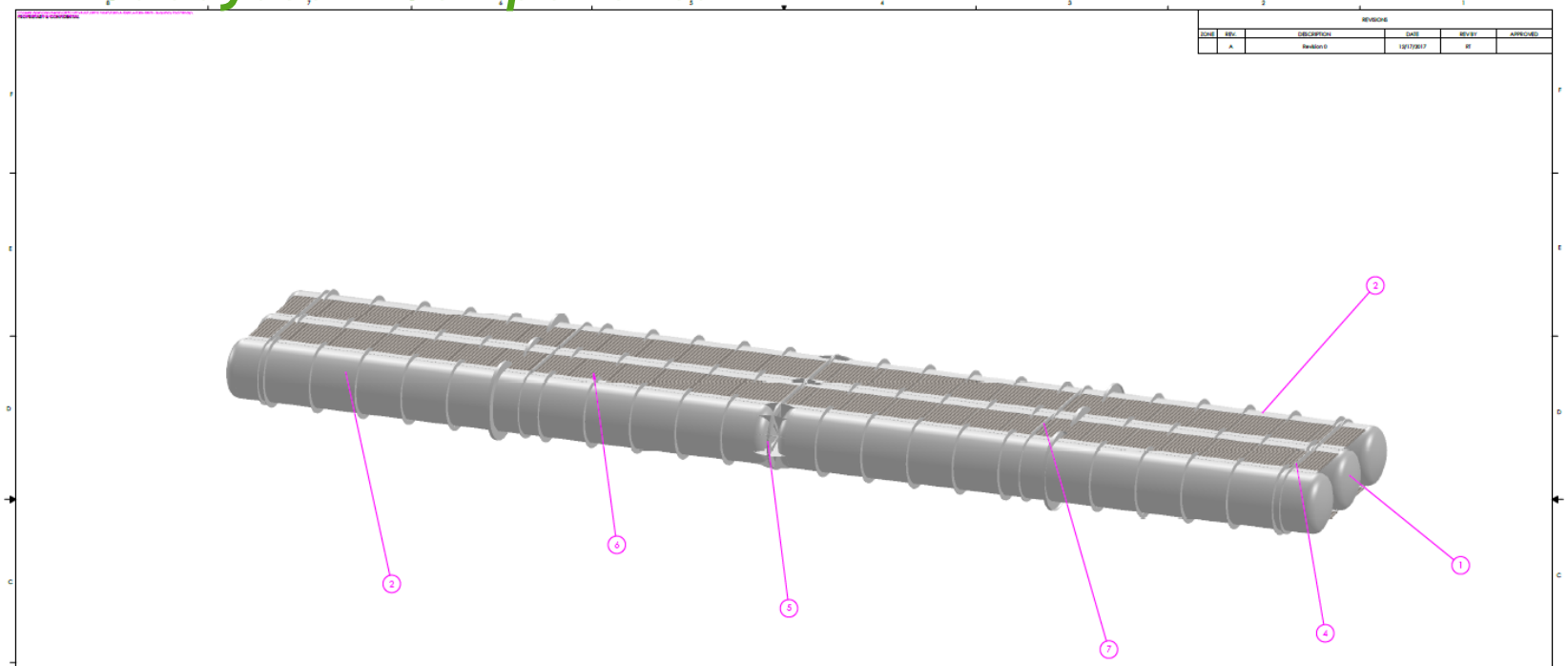

ITEM NO.	PART NUMBER	DESCRIPTION	Material	Mass	QTY.
1	A-TD20-10071 - Buoyancy Pod Pipe Assembly - Middle	BUOYACY POD PIPE ASSEMBLY - MIDDLE	ASTM A106 GRADE B	8979.74	2
2	A-TD20-10071 - Buoyancy Pod Pipe Assembly - Middle	BUOYACY POD PIPE ASSEMBLY - OUTER1	ASTM A106 GRADE B	8757.03	2
3	A-TD20-10071 - Buoyancy Pod Pipe Assembly - Middle	BUOYACY POD PIPE ASSEMBLY - MIDDLE	ASTM A106 GRADE B	8757.03	2
4	P-TD20-10074 - BP Connection Plate 01	BP Connection Plate 01	ASTM A709 GRADE 36T2	259.15	4
5	P-TD20-10076 - BP Connection Plate 03	BP CONNECTION PLATE 03	ASTM A709 GRADE 36T2	571.14	1
6	P-TD20-10077 - BP Fairing Plate 01	BP FAIRING PLATE 01	ASTM A36 Steel	16.38	108
7	P-TD20-10075 - BP Connection Plate 02	BP CONNECTION PLATE 03	ASTM A709 GRADE 36T2	292.04	4

REVISIONS					
ZONE	REV.	DESCRIPTION	DATE	REV'BY	APPROVED
	A	Revision D	12/17/2017	RF	

TITLE: BUOYANCY POD - PRIMARY

SIZE D | DWG. NO. A-TD20-10070 | REV A

SCALE: 1:100 | MASS: 37500 | SHEET 1 OF 2

Critical Changes Since PDR:

- Extended length to support generator weight
- Connected pods to provide stiffness for chasses
- Elliptical ends to reduce local stresses
- Reduced pod-pod connections
- Flanged plate connections to chassis & between pods

ORPC OCEAN RENEWABLE POWER COMPANY

Subsystem Overview

Dimensions – A-TD20-10071 & A-TD20-10072 (MAIN PIPE SECTIONS)

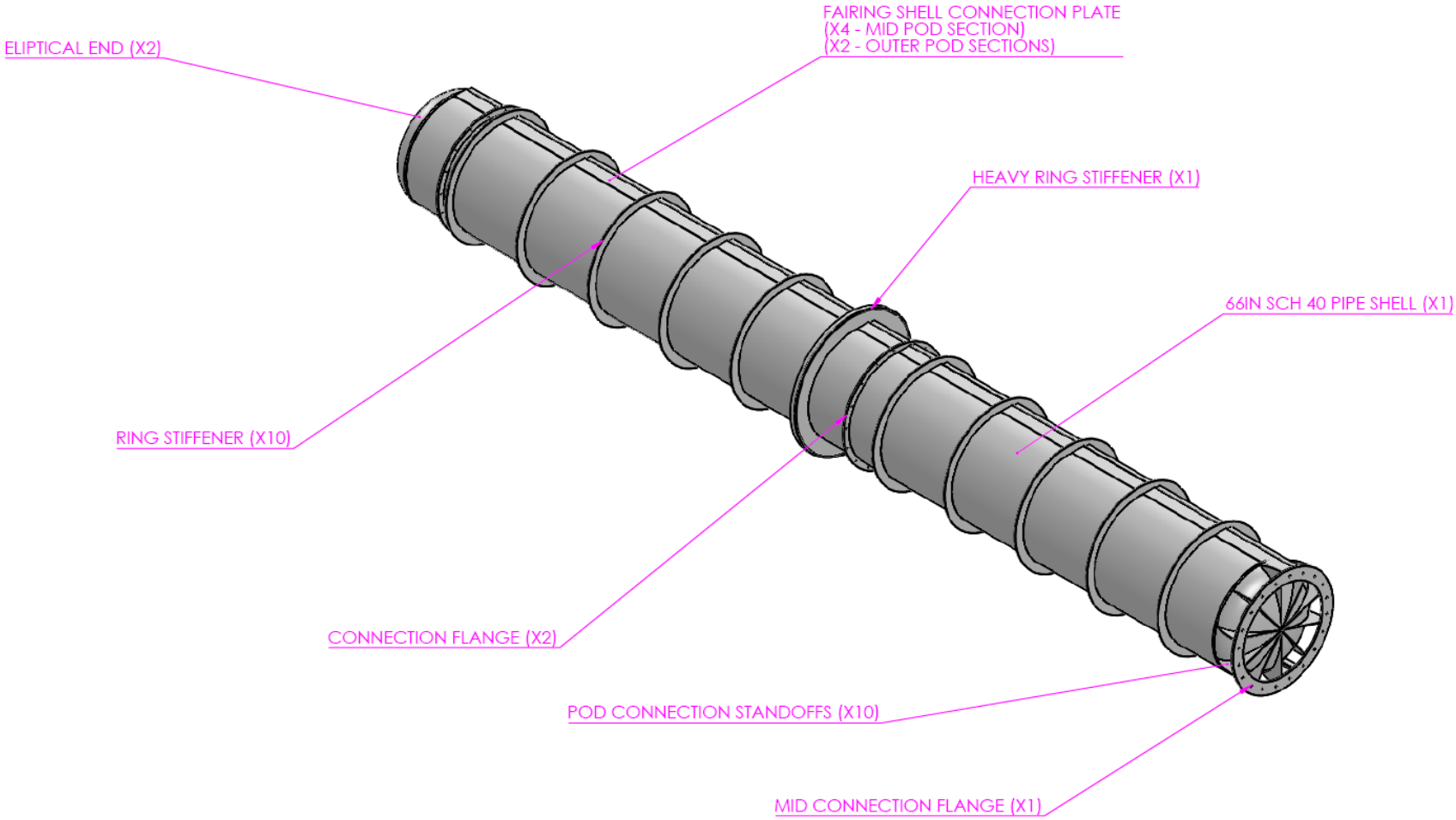

ORPC
OCEAN RENEWABLE
POWER COMPANY

Subsystem Interface Details

Specifications

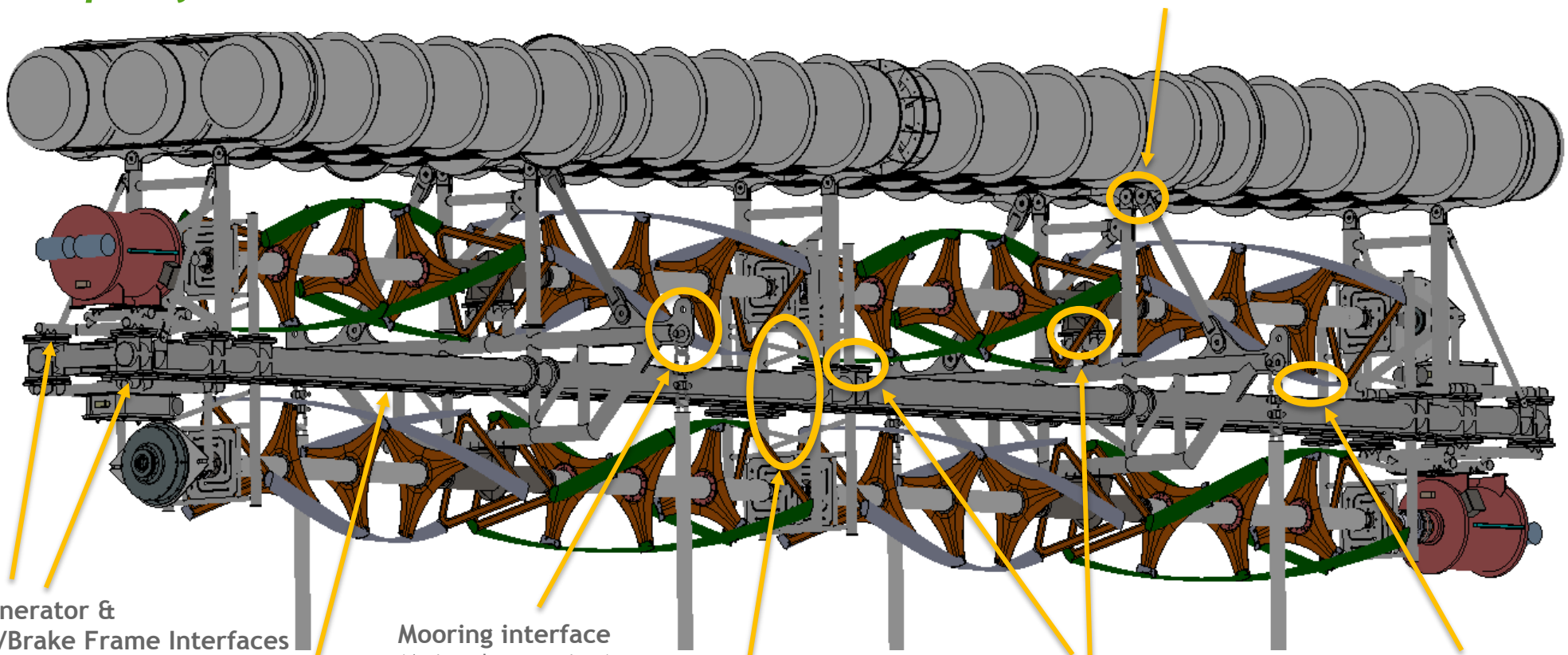

ORPC
OCEAN RENEWABLE POWER COMPANY

Assembly, Installation, & Maintenance

Subsystem Assembly Strategy

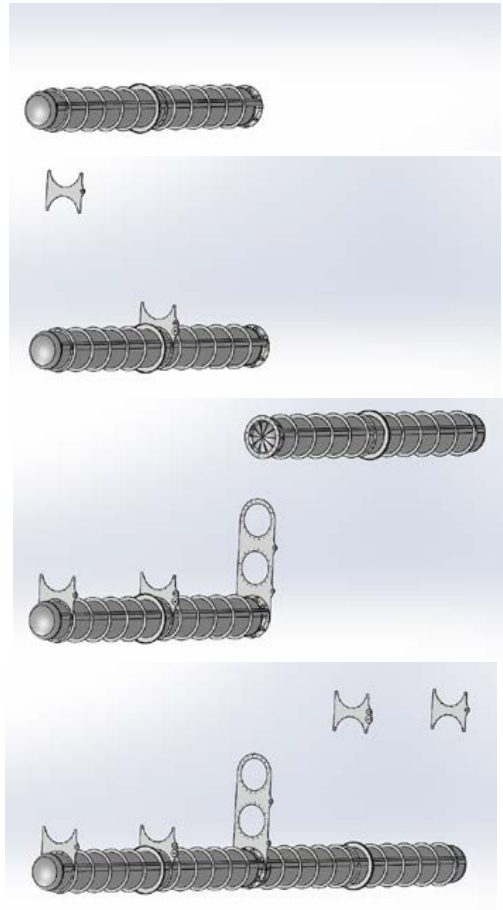

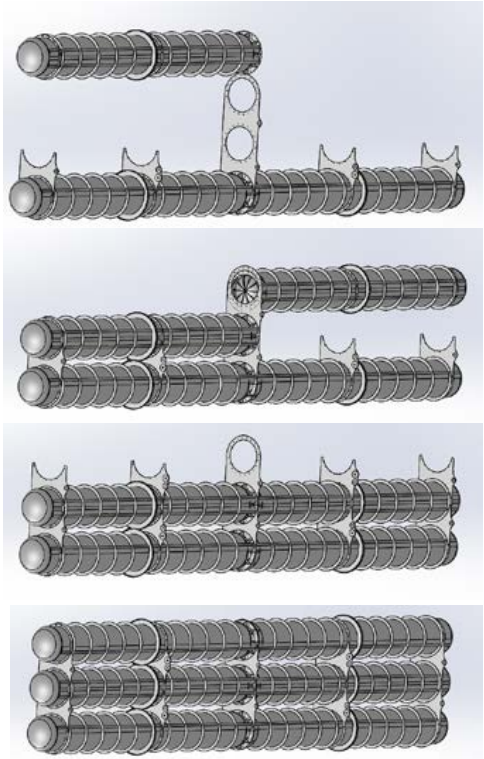

ASSEMBLY MAIN STRUCTURE

1. Each pipe section can be lifted with local equipment.
2. Sections are bolted together
3. Assembled pods CAN NOT be lifted
4. Assemble in required orientation for System Integration

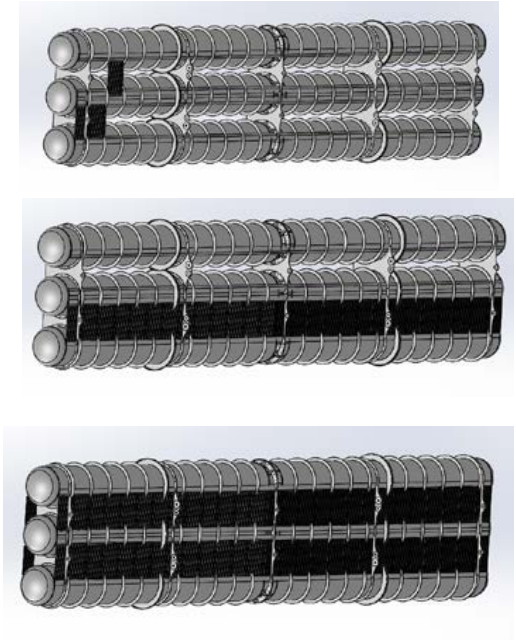

ADD FAIRING PANELS

1. Panels can be handled by hand or with local equipment
2. Panels are screwed? Into place (**~2600 screws!!!!)**

ORPC OCEAN RENEWABLE POWER COMPANY

Analysis Overview

Critical Results: Structural Assembly

EXAMPLE: ULS 5.2-15deg

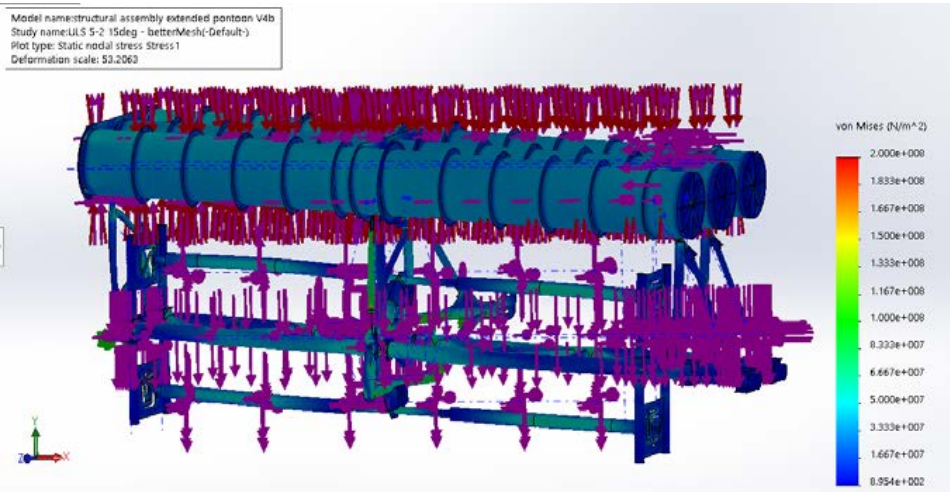

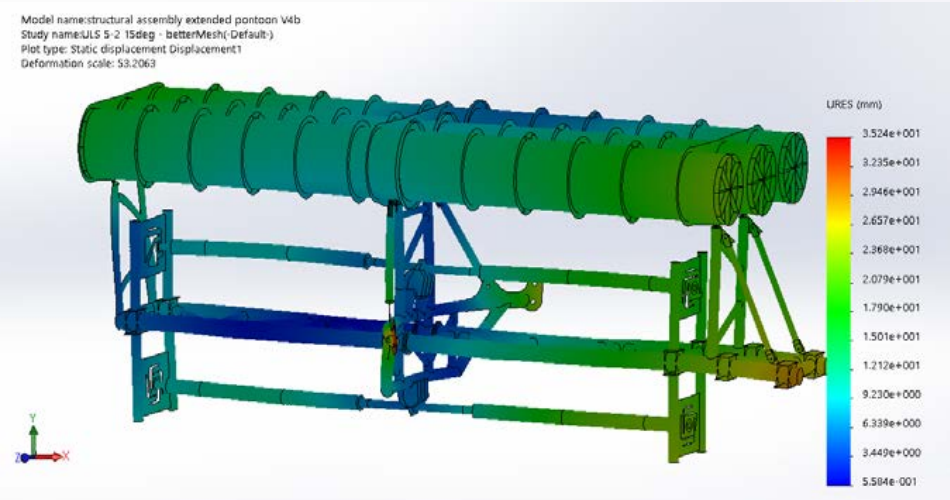

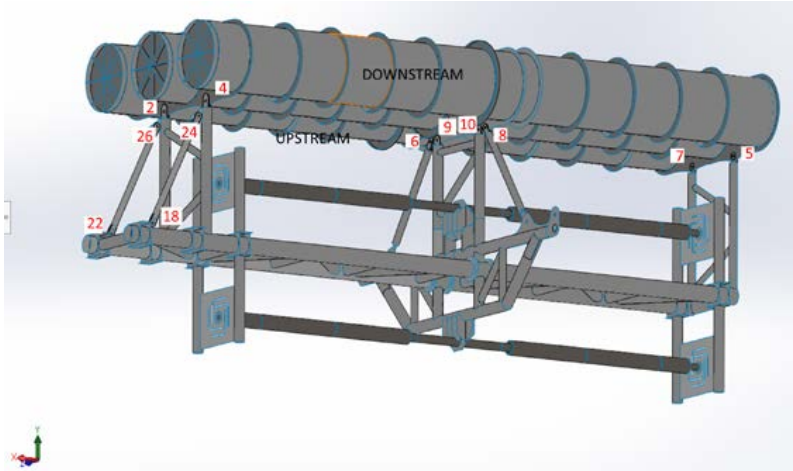

radial [kN]	force angle	Type	Resultant	X-Component	Y-Component	Z-Component	Connector
208	14.82681	Shear Force (N)	2.08E+05	0	-2.01E+05	-53178	Pin Connector-2
61	-6.90057	Shear Force (N)	60825	0	-60385	7308	Pin Connector-4
14	-3.34841	Shear Force (N)	13529	0	13506	-790.2	Pin Connector-5
45	14.97138	Shear Force (N)	44791	0	43270	11571	Pin Connector-7
5	-82.8909	Shear Force (N)	4821.1	0	-596.65	4784	Pin Connector-9
244	-5.42633	Shear Force (N)	2.44E+05	0	2.43E+05	-23063	Pin Connector-10
28	1.20E+04	Shear Force (N)	27852	-11971	25148	0	Pin Connector-18
40	1.70E+04	Shear Force (N)	39671	17049	-35820	0	Pin Connector-22
28	1.20E+04	Shear Force (N)	27852	11971	-25148	0	Pin Connector-24
40	1.70E+04	Shear Force (N)	39671	-17049	35820	0	Pin Connector-26
389	-36.0684	Shear Force (N)	3.89E+05	0	3.15E+05	-2.29E+05	Pin Connector-6
142	35.93933	Shear Force (N)	1.42E+05	0	1.15E+05	83323	Pin Connector-8

ORPC
OCEAN RENEWABLE
POWER COMPANY

Analysis Overview

Outer Support Connection

DNV Padeye Analysis
(side connection):*

- Assumptions:
  - Fmax = 35kN (max radial pin force from ULS FEA 11/28/17)
  - POU Type: A
  - Risk: high
  - Class: R30
  - 1 Shear Face for Pin
- Geometric Results:
  - Dpin = 35mm
  - Dhole = 37.1mm
  - Tplate = 19.05mm
  - Rplate = 70mm
  - CheekPlates = none
- Results:
  - Pin RSF (shear) = 1.04
  - Bearing Pressure: RSF = 35.31
  - Tear Out RSF = 1.11
  - Cheek Plate Weld RSF = N/A

Bolted Flange
Assumptions:

- F_{Ytot} = 290 kN (SW React laod)
- M_{tot} = 74 Nm (SW React)
- $D_{boltCircle}$ = 325mm
- D_{bolt} = 12. 5mm
- T_{flange} = 19.1mm
- N_{bolt} = 8
- F_{bolt} = 23 kN (assumes separating force evenly distributed but single bolt takes moment load)

Results:
(from Shigley's bolt eqs):

- $F_{preload}$ = 12kN
- RSF_{bolt} = 5.4
- $RSF_{pull\text{-}thru}$ = 28

FEA under ULS loading

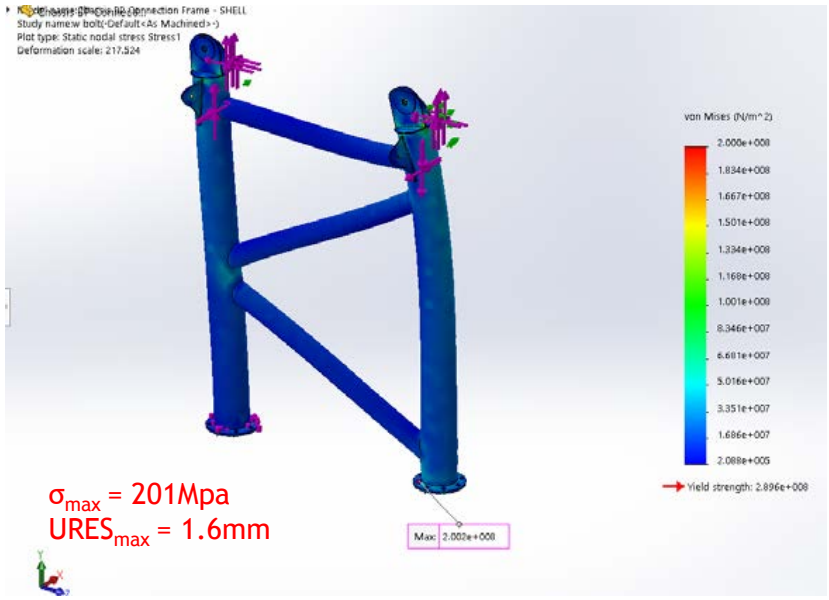

σ_{max} = 201Mpa
$URES_{max}$ = 1.6mm

Fatigue Analysis (DNV-RP-C203)

Tubular Joint Fillet Weld	Con. Plate Joint Fillet Weld	
• Type: F • T_max=9.5mm • K=0.25 • $\Delta\sigma_{max}$= 205MPa	• Type: F • T_max=12.5mm • K=0.25 • $\Delta\sigma_{max}$= 191MPa	$\sigma_{max\ FLS}$ = 163MPa → $\Delta\ \sigma_{max\ FLS}$ << 163MPa (max at flange joint = 92MPa)
Tube Surface	**Flange Plate Joint**	**Flange Bolt Plate**
• Type: B1 • T_max=9.5mm • K=0 • $\Delta\sigma_{max}$= 388MPa	• Type: F • T_max= 19.1 mm • K=0.25 • $\Delta\sigma_{max}$= 162MPa	• Type: C1 • T_max= 19.1 mm • K=0.15 • $\Delta\sigma_{max}$= 248MPa

*for BP connection see 270 Buoyancy Pod Design Overview

ORPC OCEAN RENEWABLE POWER COMPANY

Analysis Overview

Critical Results: Analysis #1

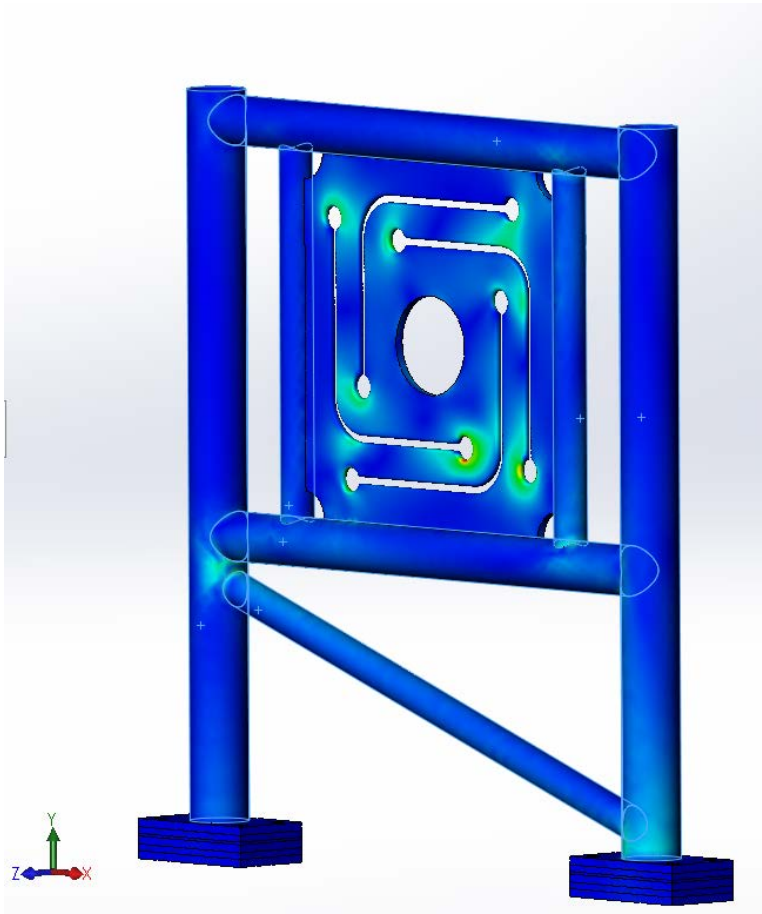

Fatigue Calculations

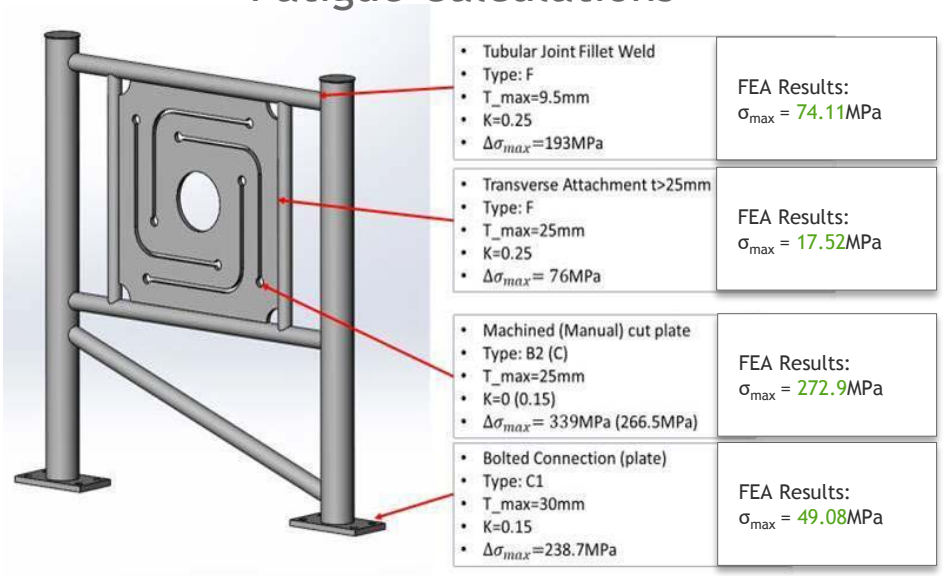

FEA Study Overview

Component	Allowable Stress	Max Stress	Max Deflection
Flex Plate	218MPa (MF=1.15)	125.7E+6N/m^2	1.5mm
End Stanchion Frame	340MPa (MF=1.15)	220.8E+6N/m^2	1.58mm

ORPC
OCEAN RENEWABLE POWER COMPANY

Analysis Overview

Critical Results: Pressure Vessel (main shell)

Design Guide: DNV-RP-C202 – Buckling Strength of Shells
Primary Buckling Modes: Shell Buckling & Panel Ring Buckling

- Loads (inc. LF):
  - P_{ext} = 525.5kPa
  - M_{max} = 781kPa*
- Geometry:
  - Shell: D = 66in, t = 9.5mm, L = 16m
  - HS: 250x90x9 Unequal angle, L = 8m (7-9m OK)
  - S: 140mm x 14.288mm, L = 1.33m (up to 1.433m OK)
- Material:
  - Fy = 250MPa
  - γ_m = 1.15
- Results:
  - Design buckling Strength: 4.68×10^7 Pa
  - Combined Shell Stress: 4.25×10^7 Pa
  - Ring Stiff (Panel) Buckling Check: Pass
  - Heavy Ring Stiffener (Panel) Buckling Check: Pass
  - External Pressure Check: Pass

*bending moment est. comes from assumption of buoyancy pod as a simply supported overhanging beam under uniform (buoyancy + drag) load. Restraining supports are considered to be mooring connections. Additional chassis connections are not considered but should reduce overall bending moments

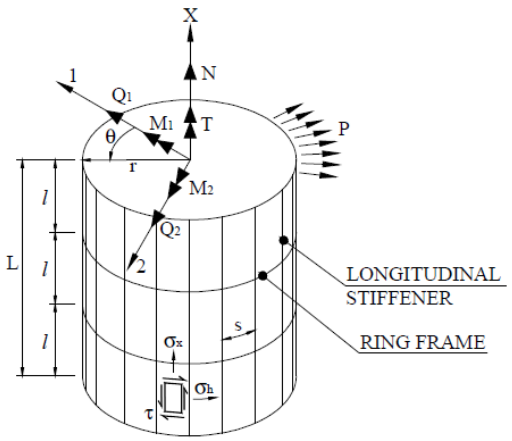

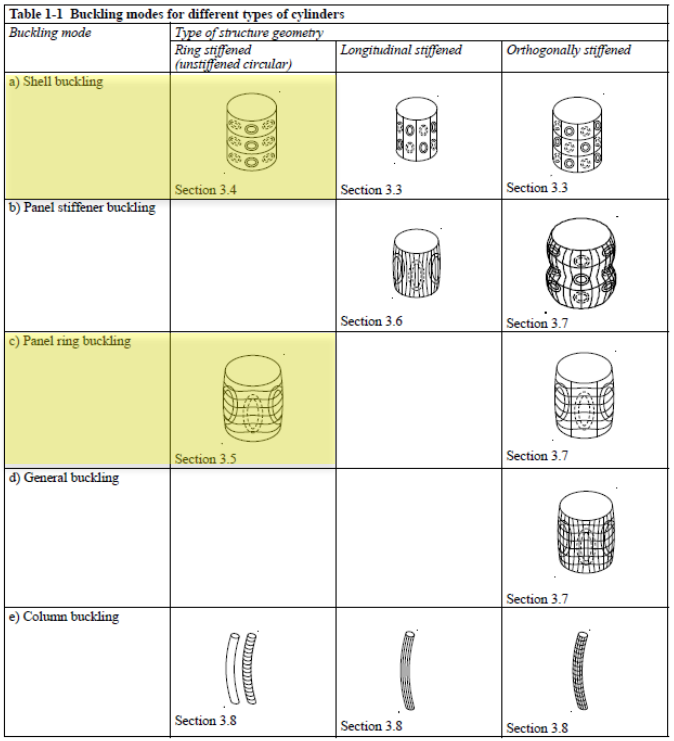

Table 1-1 Buckling modes for different types of cylinders

Buckling mode	*Type of structure geometry*		
	Ring stiffened (unstiffened circular)	*Longitudinal stiffened*	*Orthogonally stiffened*
a) Shell buckling	Section 3.4	Section 3.3	Section 3.3
b) Panel stiffener buckling		Section 3.6	Section 3.7
c) Panel ring buckling	Section 3.5		Section 3.7
d) General buckling			Section 3.7
e) Column buckling	Section 3.8	Section 3.8	Section 3.8

ORPC OCEAN RENEWABLE POWER COMPANY

Analysis Overview

Critical Results: Fairing Shell

Design Loads

- P_{max} = 8.575 kPa (inc ULS LF)
- P_{min} = -2.144 kPa (inc ULS LF)

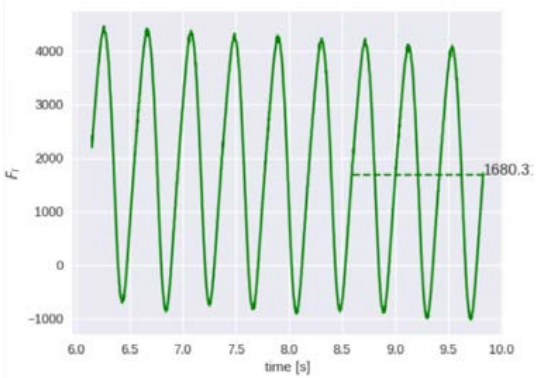

Estimated Fairing Force per m length over 1.6m fairing (Matt W. 12/1/17)

Plate Buckling

- Loads (inc. LF):
  - P_{ext} = 8.5kPa
- Geometry:
  - Plate thickness: 8.0mm,
  - L = 14.1m (longest segment)
  - Stiffeners = 0.4m apart, 6mm thickness, 75mm height
- RSF lateral loaded plate: 1.8
- Stiffener Checks: OK

Max ULS Loading

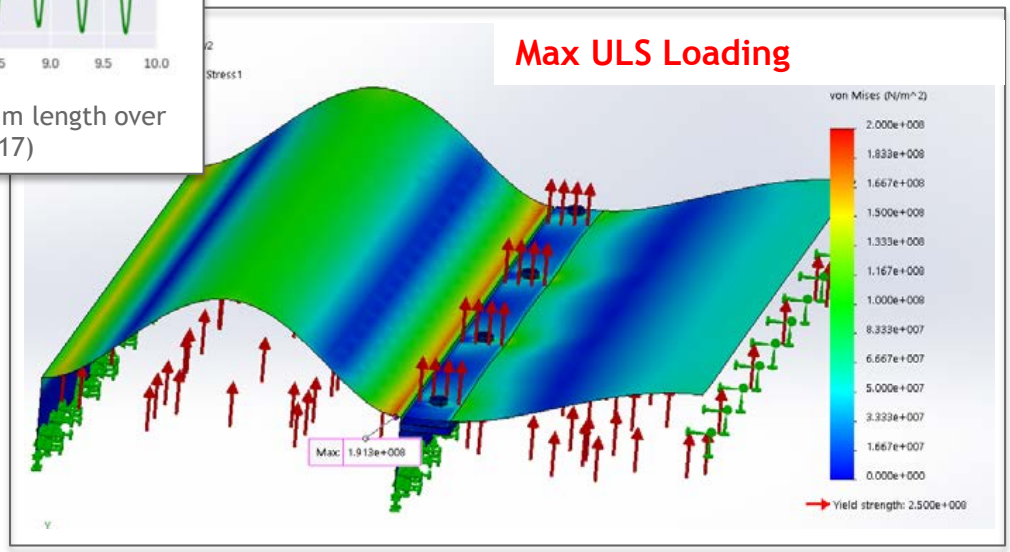

FLS Results

Max FLS Loading

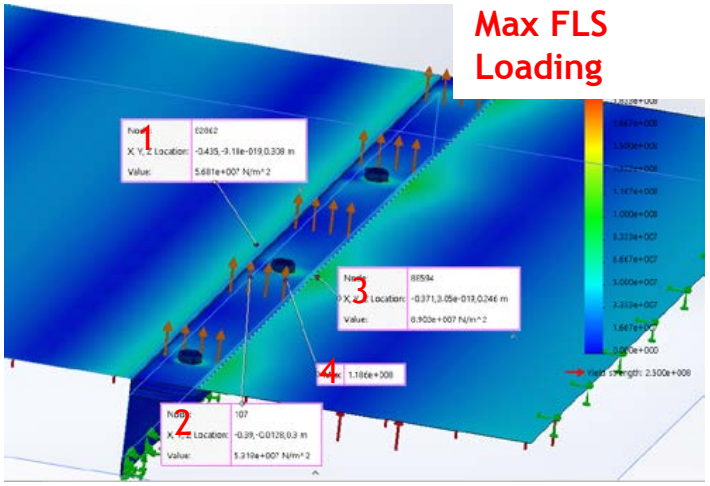

Min FLS Loading

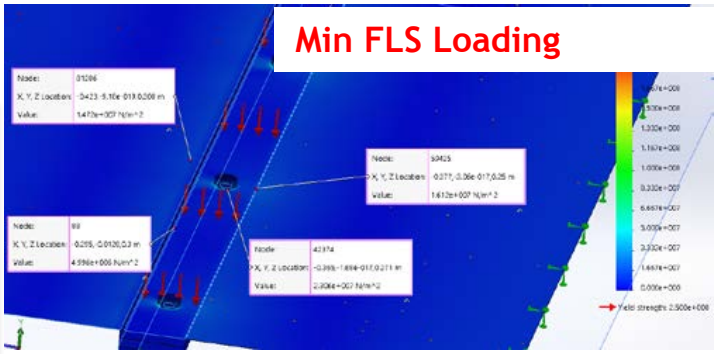

FEA RESULTS vs. Allowable

Loc	Type	σ_{max} [Pa]	σ_{min} [Pa]	$\Delta\sigma$ [MPa]	$\Delta\sigma_{allowed}$ [MPa]
1	F	5.68E+07	-1.47E+07	71.5	192.6
2	F	5.32E+07	-5.00E+06	58.9	192.6
3	B2	8.90E+07	-1.61E+07	105.1	293.2
4	C1	1.19E+08	-2.31E+07	142.1	275.9

ORPC OCEAN RENEWABLE POWER COMPANY

Corrosion Protection

Corrosion protection strategy

Primary Source: DNVGL-RP-B401 Cathodic Protection Design

Central Chassis

- Assumptions:
  - No CP needed on interior of chassis tubes
  - Surface Area: 648m^2 (including fairing plates)
  - Depth: >30m
  - Coating:
    - Type: III
    - Life: 20yrs
  - Anodes:
    - Type: Al
    - Geometry: long-slender, flush-mounted
    - Life: 5yrs

- **Results:**
  - ***Anode Mass: 160kg***
  - Cost Est: $1,140 (every 5yrs not including labor)

- Note:
  - Anode Mass ~doubles for Coat type II)
  - 10x Anode Mass for uncoated

Buoyancy Pod

- Assumptions:
  - No CP needed on interior of BP tubes
  - Surface Area: 1263m^2 (including fairing plates)
  - Depth: >30m
  - Coating:
    - Type: III
    - Life: 20yrs
  - Anodes:
    - Type: Al
    - Geometry: long-slender, flush-mounted
    - Life: 5yrs

- **Results:**
  - ***Anode Mass: 306kg***
  - Cost Est: $2,300 (every 5yrs not including labor)

- Note:
  - Anode Mass doubles (651kg for Coat type II)
  - 10x Anode Mass (3,255kg for uncoated)

ORPC
OCEAN RENEWABLE POWER COMPANY

Subsystem Cost

Estimated fabrication cost

Central Chassis

- Estimated CAPEX Cost: $330,000
  - Assumes $4.00/lb as average steel fabrication
  - Includes $40k in coating & initial anode cost
- Estimated OPEX Cost: $1,250/yr
  - Assumes 5yr inspection and CP anode replacement

Buoyancy Pod

- Estimated CAPEX Cost: $560,000
  - Assumes $4.00/lb as average steel fabrication
  - Includes $50k in coating and initial anode cost
  - Need to work with fabricator final cost estimate
- Estimated OPEX Cost: $1,250/yr
  - Assumes 5yr inspection and CP anode replacement

Total structural assembly:

- CDR estimate: $890,000
- PDR estimate: $960,000

ORPC
OCEAN RENEWABLE POWER COMPANY

TidGen® 2.0 CDR – Continuation Application

Mooring System – Task 3

ORPC
OCEAN RENEWABLE POWER COMPANY

TidGen® Moorings

Project Overview

Cobscook Bay

- Mooring system and anchors rated for 2.25m/s
- Drag and lift values for turbines taken from LExCoSS and no additional correction
- Deployment and subsystem testing used to verify CFD results for Western Passage deployment.

Western Passage

- Mooring system and anchors rated for 3.5m/s
- Drag and lift values for turbines taken as measured values from subsystem testing and from CB deployment.
- Anchors and moorings are inexpensive compared to heavy lift operations required if using CFD at face value.

ORPC
OCEAN RENEWABLE POWER COMPANY

Mooring Assembly

High Level Overview

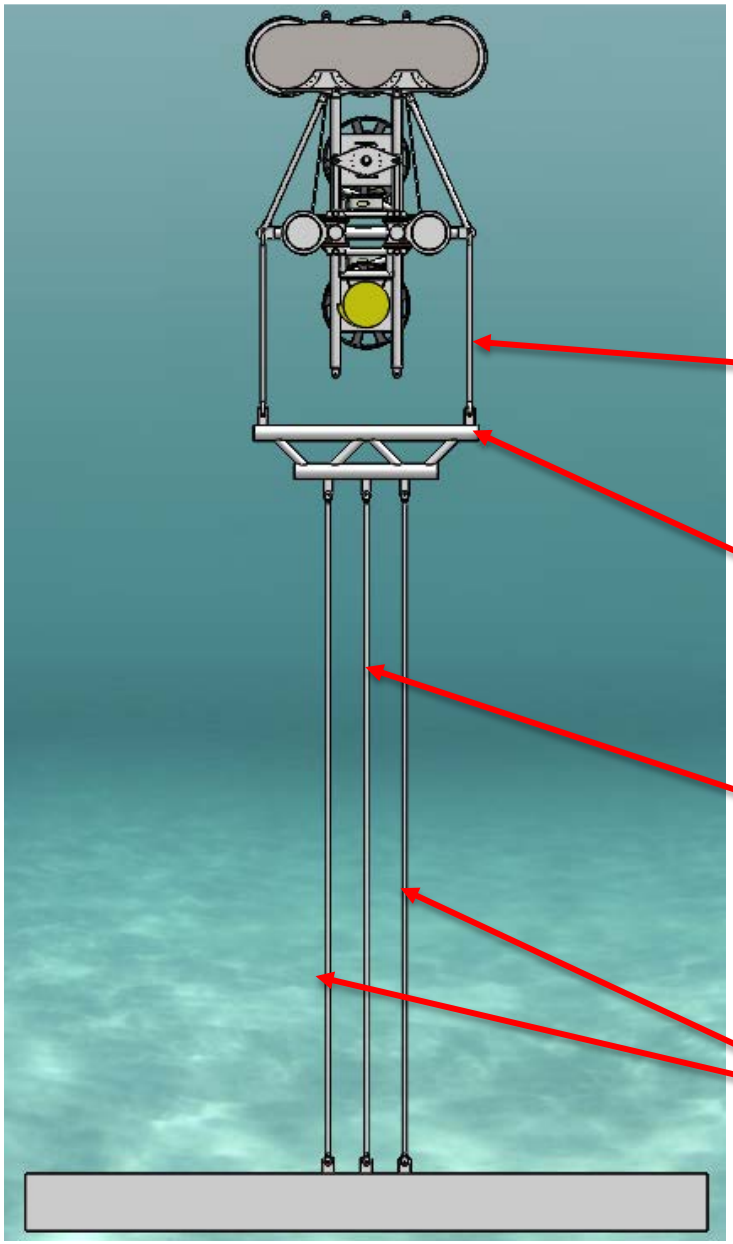

Bridle Line
2-3/4” Chain

Limit state	Load factor	Risk	
		Normal	High
ULS	γ_{mean}	1.30	1.50
ULS	γ_{dyn}	1.75	2.20
ALS	γ_{mean}	1.00	1.00
ALS	γ_{dyn}	1.10	1.25

Rigid Bridle
Fabricated I-Beam or HSS Truss

Primary Line
2-3/4” Chain

Redundant Line
2-3/4” Chain (1 link longer than Primary Line)

ORPC
OCEAN RENEWABLE POWER COMPANY

Mooring Assembly

High Level Overview

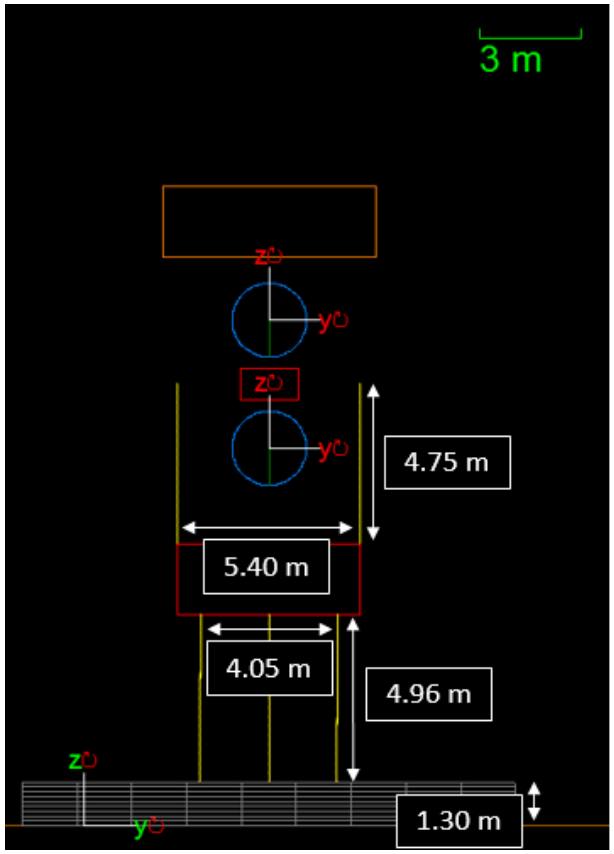

Cobscook Bay

Case	Description
Static	Freewheel, 2.25m/s
Failure 1	Primary mooring line snap
Failure 2	Fore bridle line snap
Failure 3	Aft bridle line snap
Fatigue	Static with oscillations

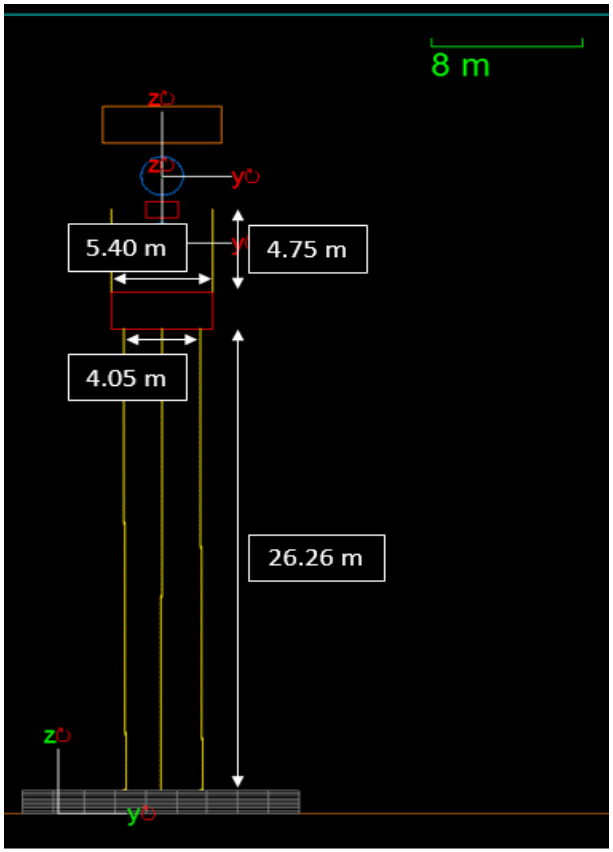

Western Passage

ORPC
OCEAN RENEWABLE
POWER COMPANY

The bridle segment has been converted into a 3m spring component with a response 6 and target load of 600kN, remainder of the bridle line is chain.

The figure demonstrates the difference between the chain case and spring case when bridle line 1 fails.

Analysis Overview

Critical Results: Fatigue Analysis

- Using both simulated and estimated cycle counts, significant overdesign of mooring lines
- Resulting from oversize for ALS shock loads

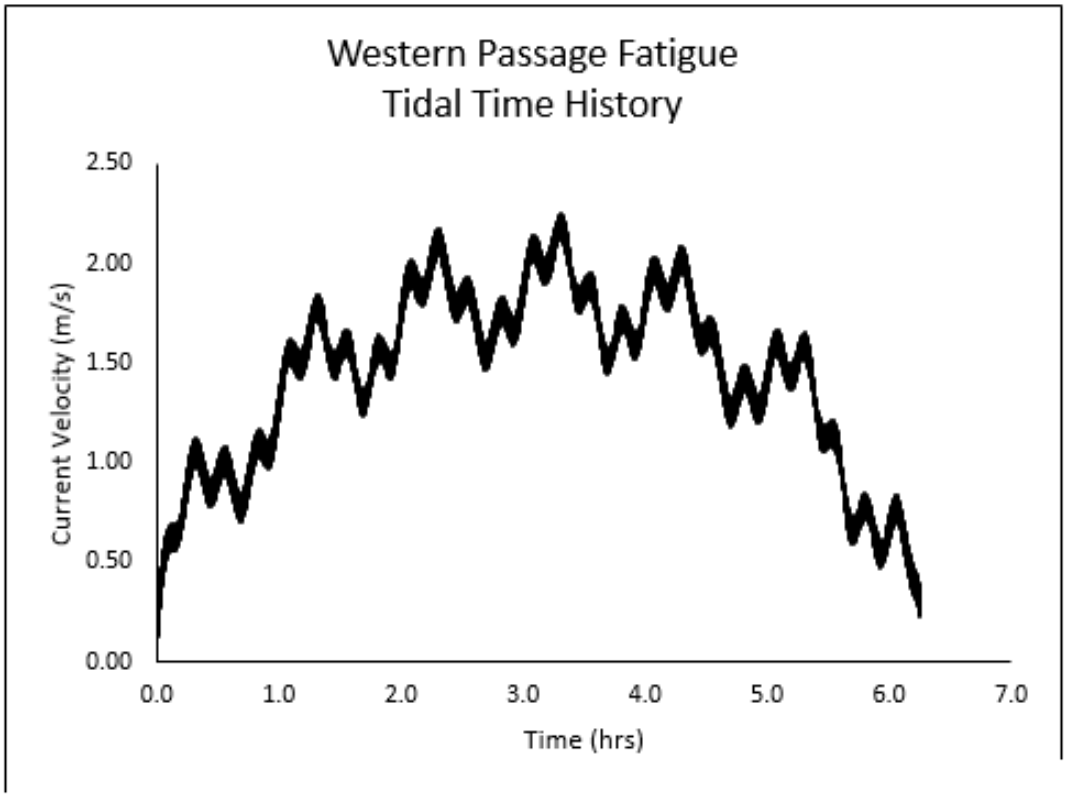

	Western Passage		Cobscook	
	Lifetime (years)	Annual Damage	Lifetime (years)	Annual Damage
Primary Mooring Line	43	2.306e-2	120	8.308e-3
Redundant Line	28,773	3.476e-5	254,851,221	3.924e-9
Bridle Line	219	4.569e-3	1,122	8.914e-4

ORPC
OCEAN RENEWABLE POWER COMPANY

Analysis Overview

Critical Results: Line Clashing

- Adding a rigid spreader bar, connected from each redundant line to the primary line, to ensure that there is always space between the lines
- Increasing the separation distance between the anchor connection points of the redundant lines and the primary line

Possible that aft line touches down on anchor

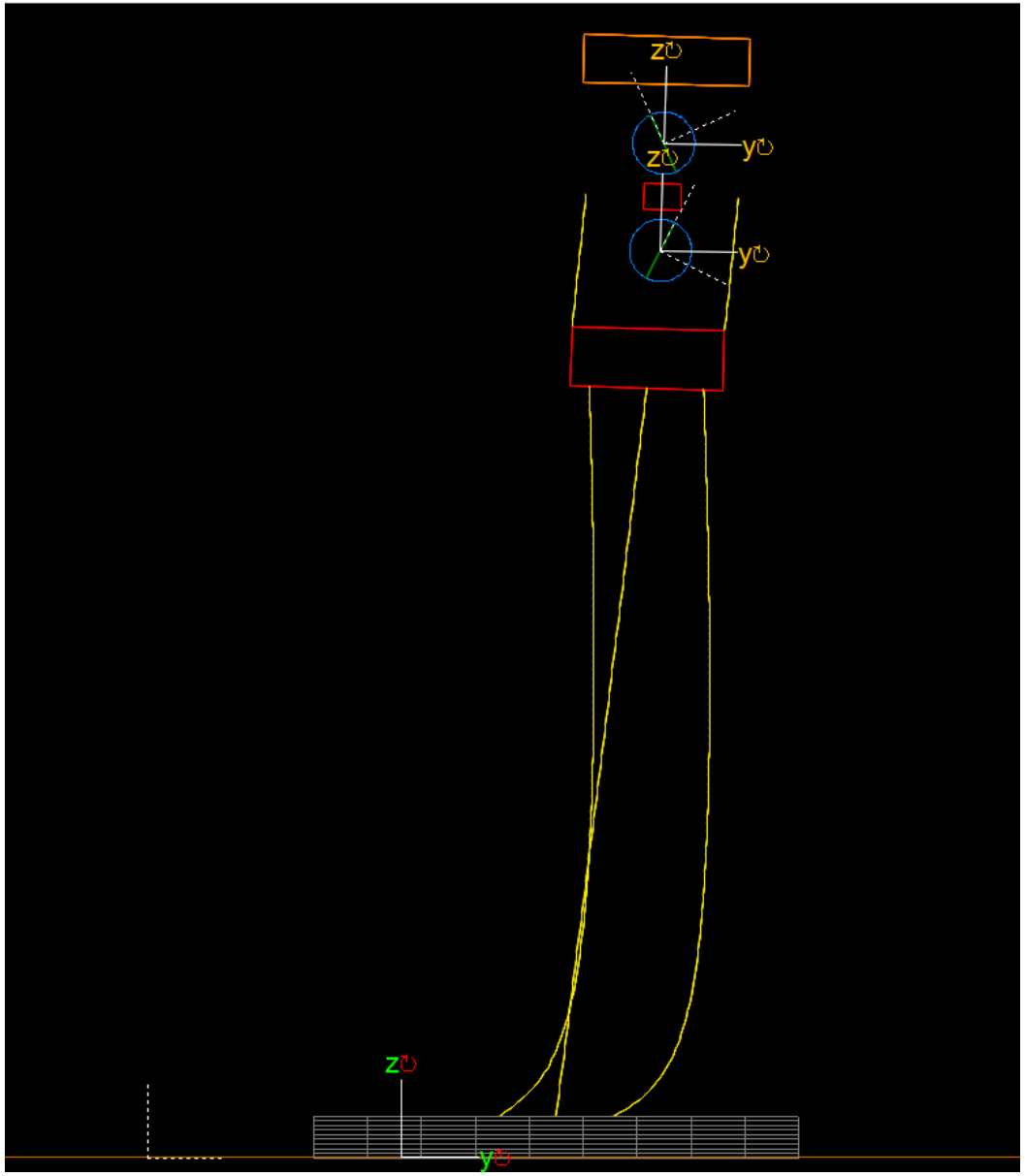

ORPC
OCEAN RENEWABLE
POWER COMPANY

Subsystem Overview

Anchor Design

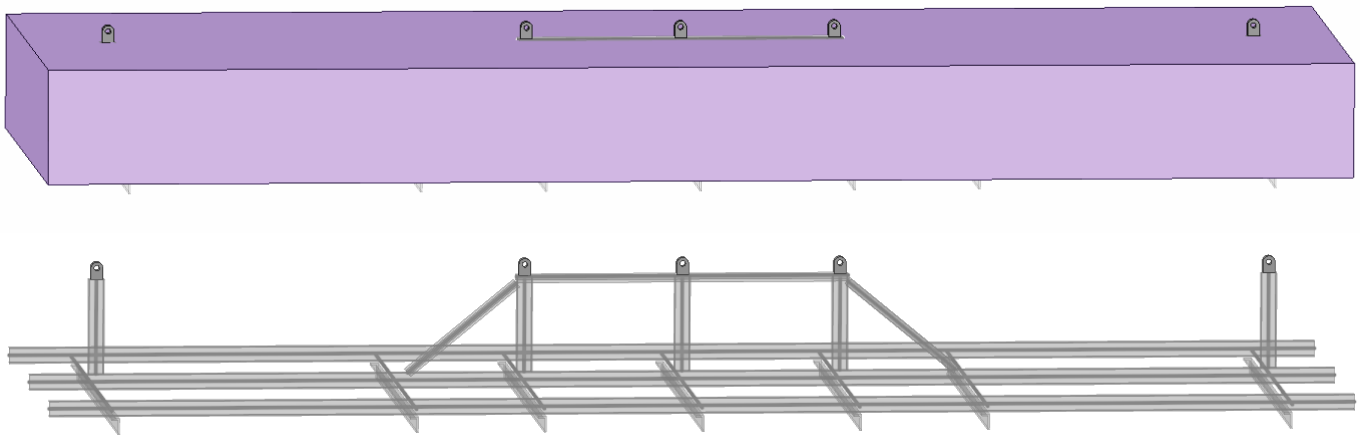

Dry Weight: 463 ton
Buoyant Weight: 246 ton

Anchor Weight	2,400kN
Length	17.2m
Width	7.5m
Height	1.5m

ORPC
OCEAN RENEWABLE
POWER COMPANY

Subsystem Cost

Estimated fabrication cost

Bridle Lines						
Item #	Manufacturer/Supplier	Product	Units	Unit Cost	Qty	Cost
	Anchor Marine Houston	2-3/4" Gr3 Studlink Chain	90-ft shot	$5,750.00	1	$5,750.00
	Anchor Marine Houston	2-1/2" Sea Link shackle	1	$600.00	16	$9,600.00
Western Passage Deployment Site						
	Anchor Marine Houston	2-3/4" Gr3 Studlink Chain	90-ft shot	$5,750.00	6	$34,500.00
	Anchor Marine Houston	2-1/2" Sea Link shackle	1	$600.00	24	$14,400.00
Bridle Load Cell						
	Load Cell Central	Tension Link	1	$5,750.00	4	$23,000.00
	Anchor Marine Houston	2-1/2" Sea Link shackle	1	$600.00	4	$2,400.00
Rigid Bridle						
	--	Bridle	1	$42,000.00	2	$84,000.00
Anchor						
	--	Anchor	1	$150,000.00	2	$300,000.00
					Total	$473,650.00

ORPC
OCEAN RENEWABLE POWER COMPANY

Risk Assessment & Mitigation

General Consequences and Control

- Moderate Failure
- Devices moves out of flow
- Redundant line capacity reduced
- Device orientation impairs performance

- Severe Failure
- P&D Cable damaged or destroyed
- Device not operable due to out of useable flow
- Device moves off subsea cliff
- Device interferes with regular ship traffic

Controls:

- Double and triple redundancy to prevent device loss and facilitating recovery
- Full-scale turbine performance testing

ORPC
OCEAN RENEWABLE POWER COMPANY

Risk Assessment & Mitigation

Anchor Failure

- Detection:
  - Abnormal mooring line loads
  - Abnormal device position and orientation
- Causes:
  - Low estimate of friction
  - Anchor undersized due to low estimate of turbine drag

Controls:

- Anchor holding tests and DNV friction guidelines
- Full-scale turbine performance testing

ORPC
OCEAN RENEWABLE POWER COMPANY

Risk Assessment & Mitigation

Mooring Line Failure

- Detection:
  - Abnormal mooring line loads
  - Abnormal device position and orientation
- Causes:
  - Shackle Abrasion
  - Chain corrosion
  - Chain abrasion due to redundant line touchdown

Controls:

- Upsize chain for corrosion allowance & regular visual inspection
- Additional shackles to add more degrees of freedom than OcGen
- Secure redundant line to primary to prevent touchdown

ORPC
OCEAN RENEWABLE POWER COMPANY

Validation Testing

BP2 Test Plan – Anchor Capacity

- 3+ One ton anchors
- Deployed in Western Passage project site
- Measure line tension and angle, determine holding capacity
- Investigate anchor features to increase lateral holding capacity

ORPC
OCEAN RENEWABLE POWER COMPANY

TidGen® 2.0 CDR – Continuation Application

Deployment and Retrieval System (Task 3)

ORPC
OCEAN RENEWABLE POWER COMPANY

Subsystem Overview

Functional Description & Performance

Able to lift, transport, and lower a full TidGen power system with accurate positional station keeping during minimal flow periods.

Device will be used in all deployment, maintenance, and decommission activities.

ORPC
OCEAN RENEWABLE POWER COMPANY

Subsystem Overview

Subsystem Components

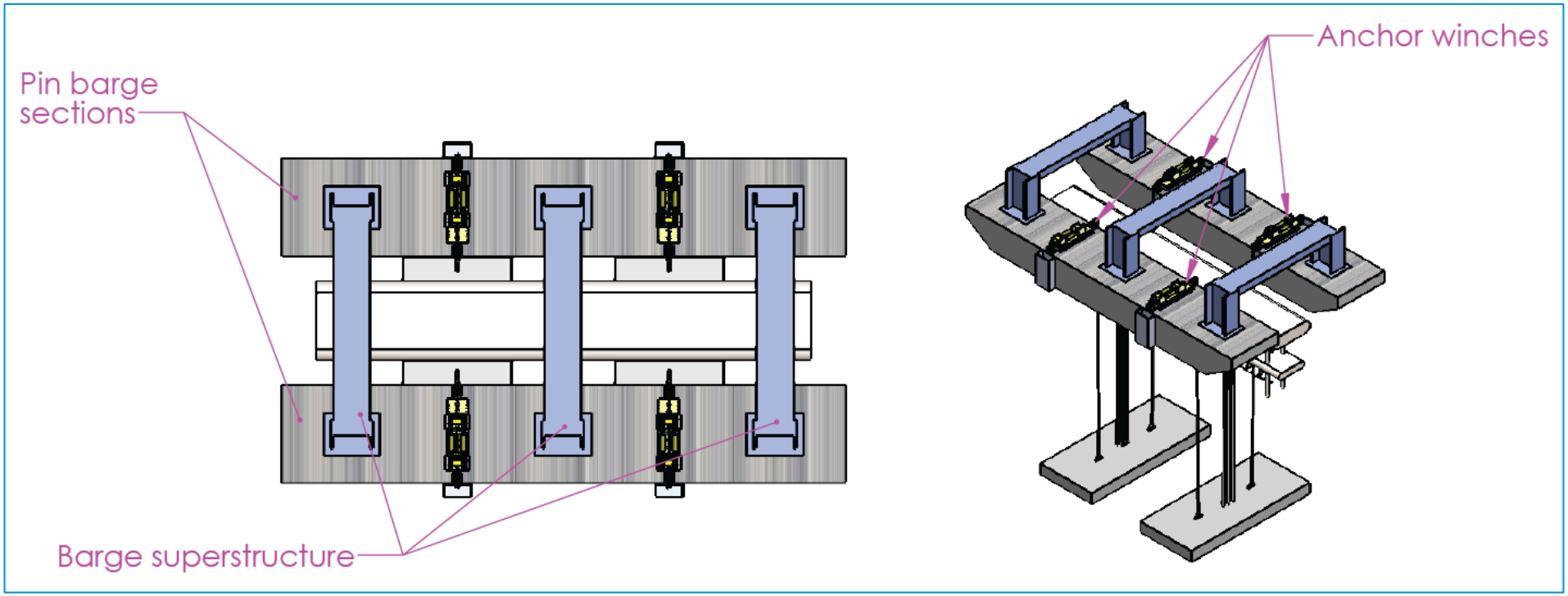

*** Additional equipment / subsystems

- Hydraulic / electric power unit
- Tow/Push positioning equipment/vessels
- Power / data cable equipment
- On-water safety equipment

ORPC
OCEAN RENEWABLE POWER COMPANY

Specifications & Requirements

Load Description

Full capacity winches

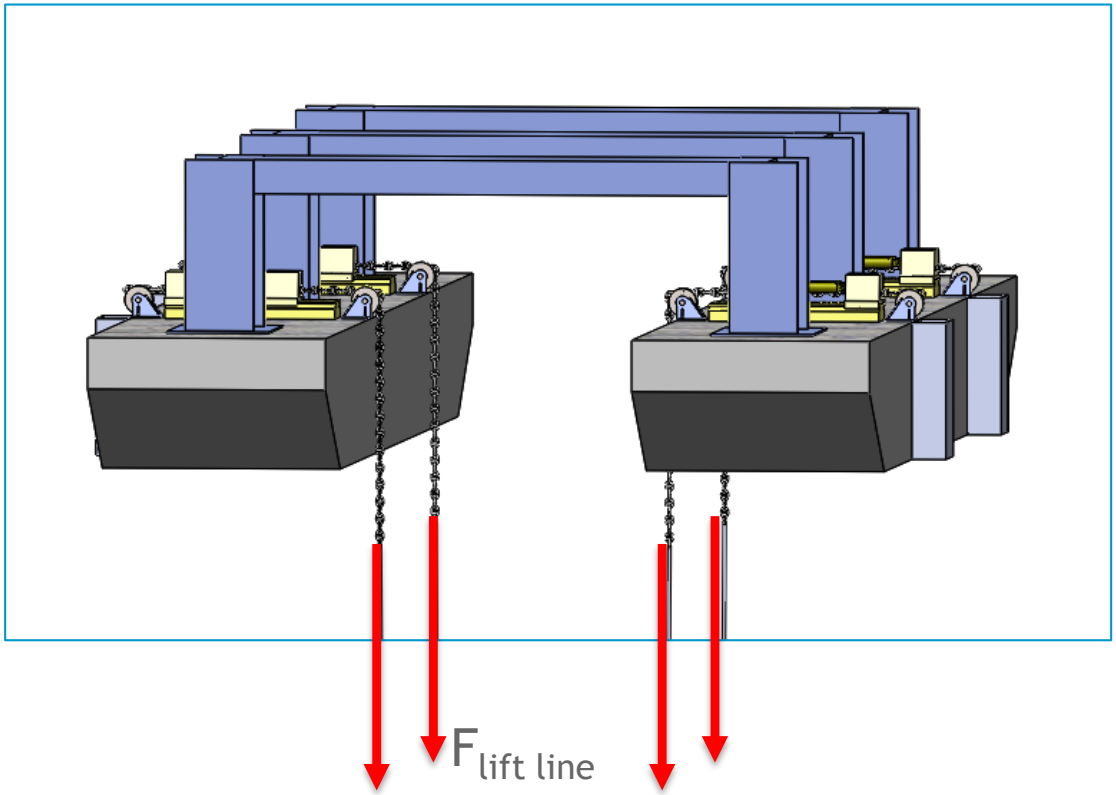

- Full system weight distributed to 4 lifting lines

ORPC
OCEAN RENEWABLE POWER COMPANY

Specifications & Requirements

Specifications

Requirement	Value
Deployment vessel (without the TidGen® device) towing sea state	3
Deployment barge minimum interior width	10m
Deployment barge minimum length	30m
Deployment vessel hull concept	dual-hull (catamaran) (can lift TidGen® device between hulls)
Barge design working load	600T
Deck Ancillary Power Capacity	2kW 110VAC Power
Deployment barge lift capacity	> 5000kN (includes 1.25/0.9 Load factors)
Number of lift points	4 (2 per anchor) Barge includes mounts / interfaces for winches and winch motors
Maximum system Sea State for deployment	2
Deployed anchor positional accuracy	+/-5m
Deployed Mooring system orientation accuracy	+/- 5deg
Minimum winch speed	= 1m/min
System with full TidGen® device tow speed	= 2knts

ORPC
OCEAN RENEWABLE POWER COMPANY

Assembly, Installation, & Maintenance

Subsystem Installation Strategy

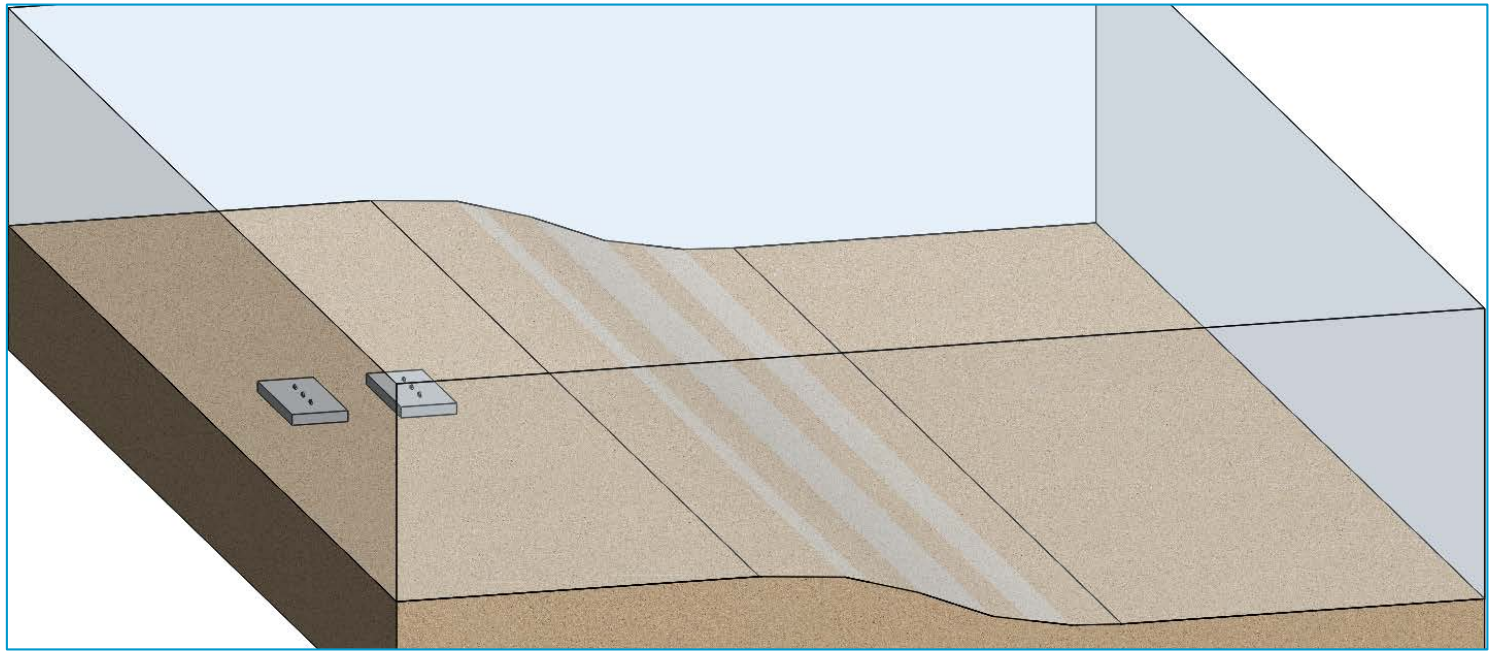

Build / stage anchors near shore

- Each anchor will weigh ~200 tons
- Staging site will need to be 30 m deep at low tide.

ORPC
OCEAN RENEWABLE POWER COMPANY

Assembly, Installation, & Maintenance

Subsystem Installation Strategy

Bring device into water

- Use airbag roller to bring device down shore ramp into water / tidal area

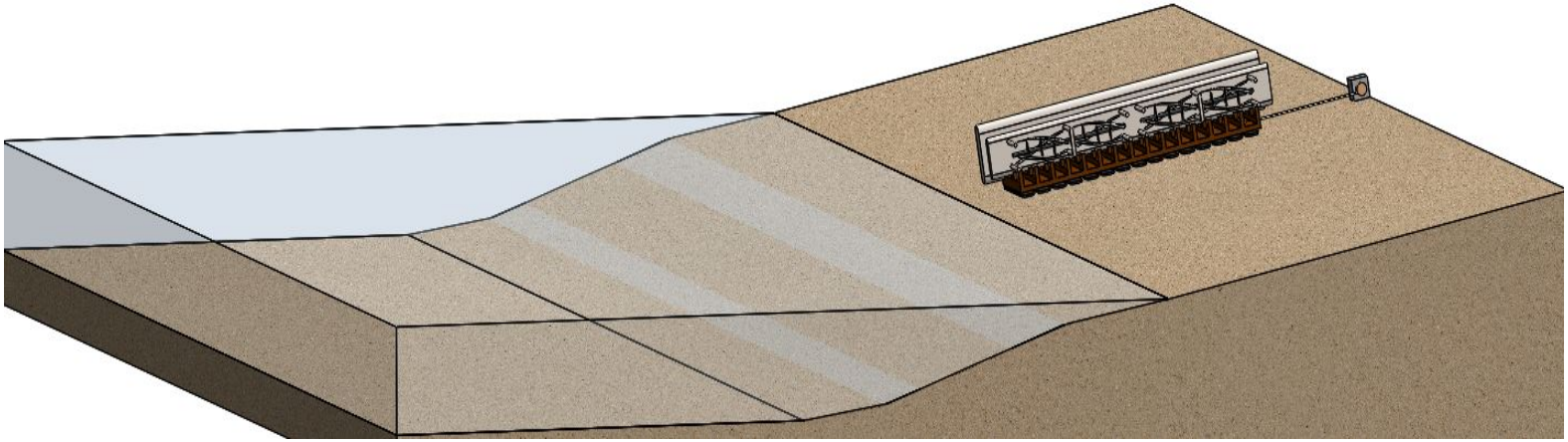

ORPC
OCEAN RENEWABLE
POWER COMPANY

Assembly, Installation, & Maintenance

Subsystem Installation Strategy

Bring device into water

- Connect float bags to bottom of device

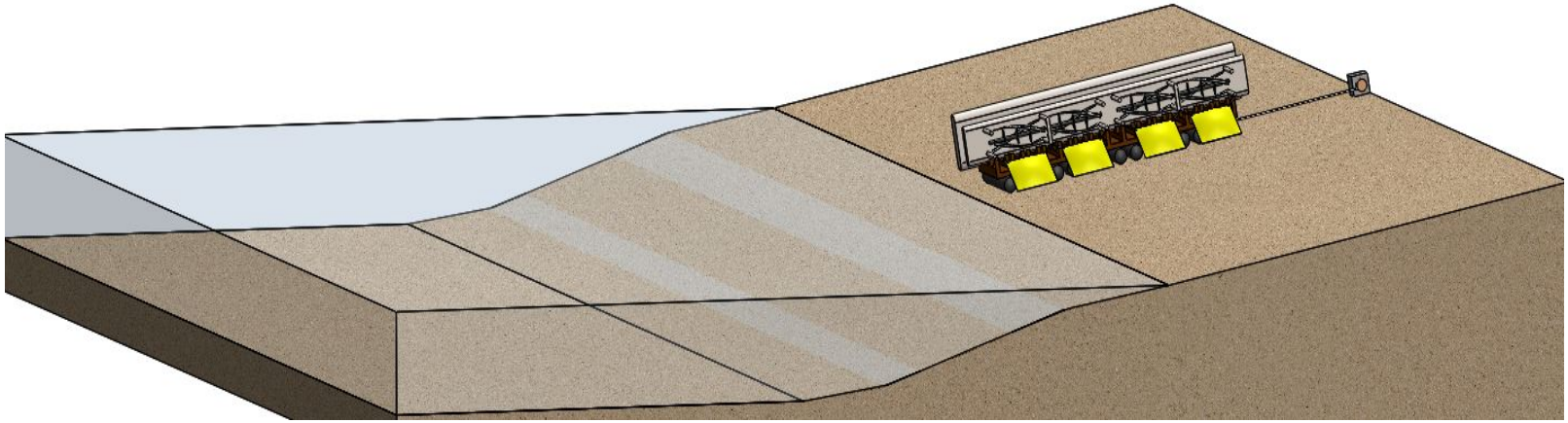

ORPC
OCEAN RENEWABLE
POWER COMPANY

Assembly, Installation, & Maintenance

Subsystem Installation Strategy

Bring device into water

- Continue to lower device into water

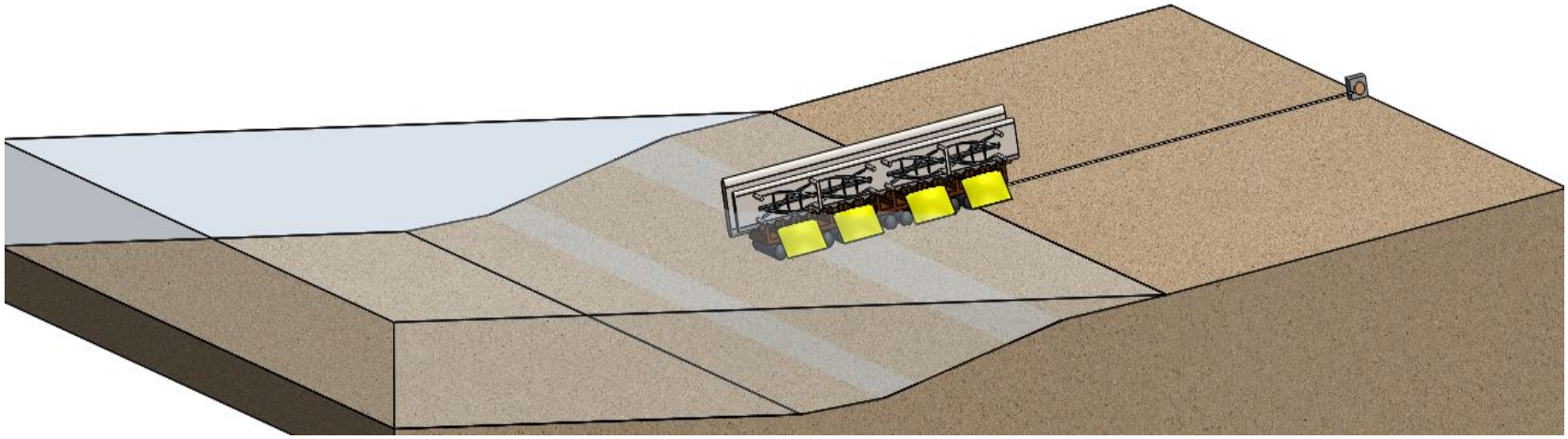

ORPC
OCEAN RENEWABLE
POWER COMPANY

Assembly, Installation, & Maintenance

Subsystem Installation Strategy

Bring device into water

- Move device into water intil floating

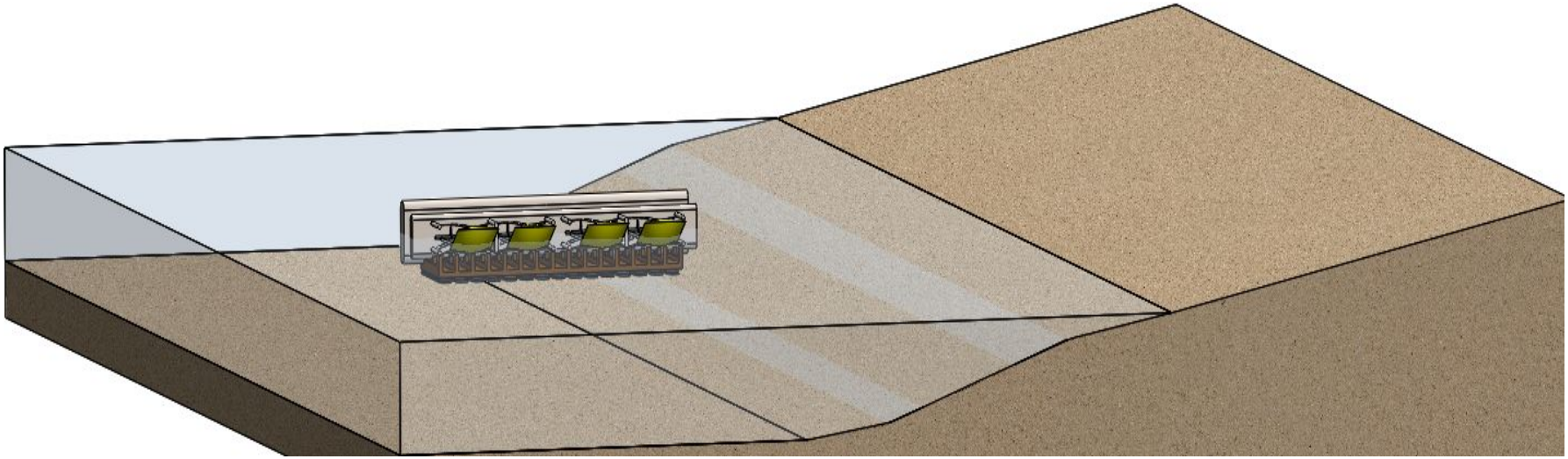

ORPC
OCEAN RENEWABLE
POWER COMPANY

Assembly, Installation, & Maintenance

Subsystem Installation Strategy

Reorient Device

- Slowly deflate air bags allowing the device to move from the assembly position to the deployed position (with the buoyancy pod at the top of the device)

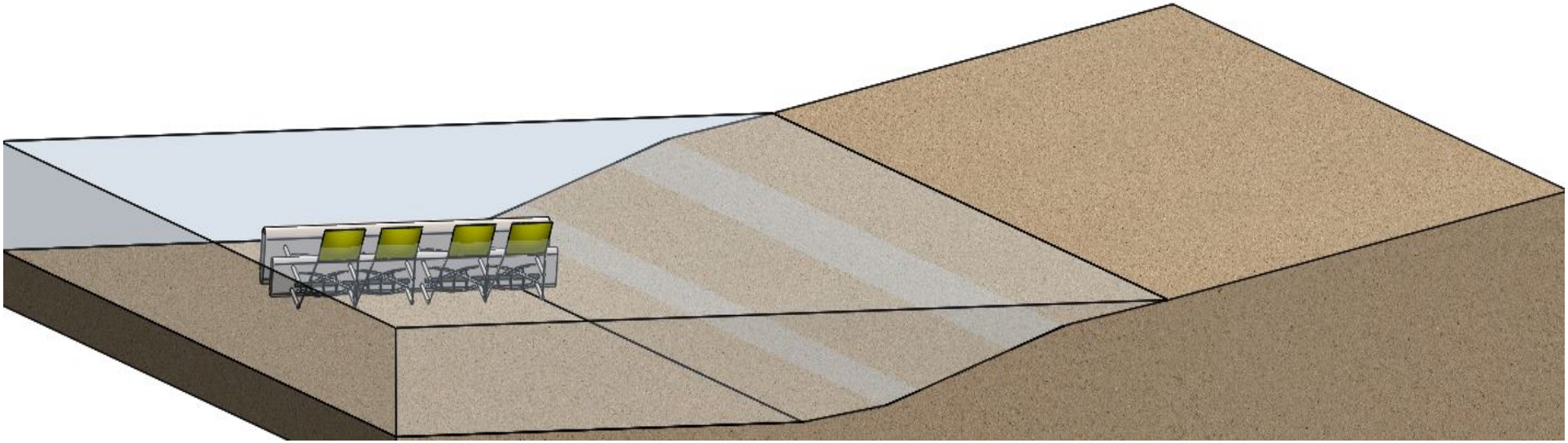

ORPC
OCEAN RENEWABLE
POWER COMPANY

Assembly, Installation, & Maintenance

Subsystem Installation Strategy

Connect to the Deployment System

- Position deployment barge around device and attach winches
- Move device to pre-staged anchors

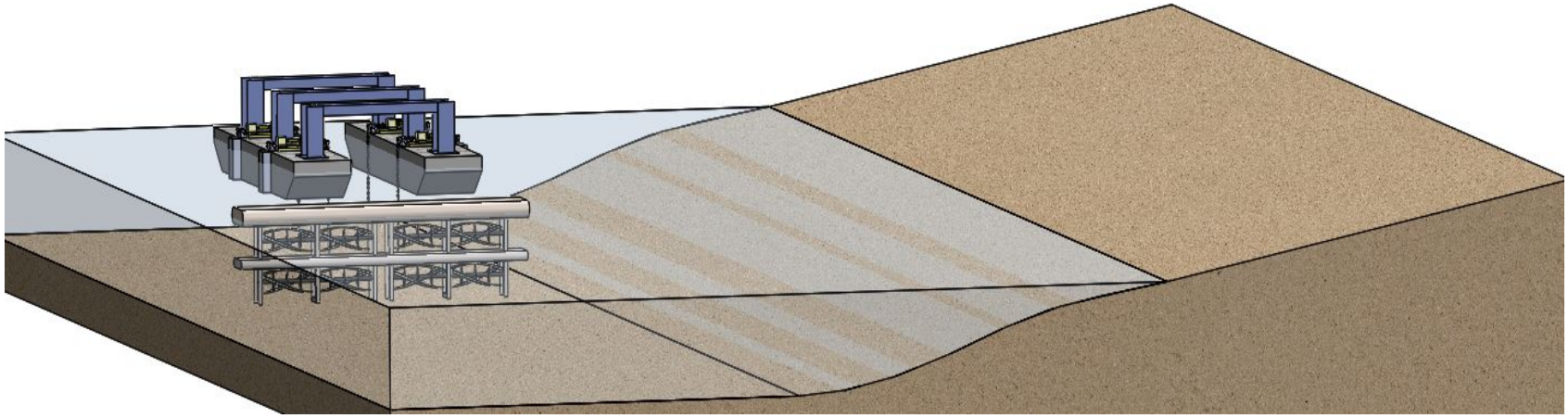

ORPC
OCEAN RENEWABLE
POWER COMPANY

Assembly, Installation, & Maintenance

Subsystem Installation Strategy

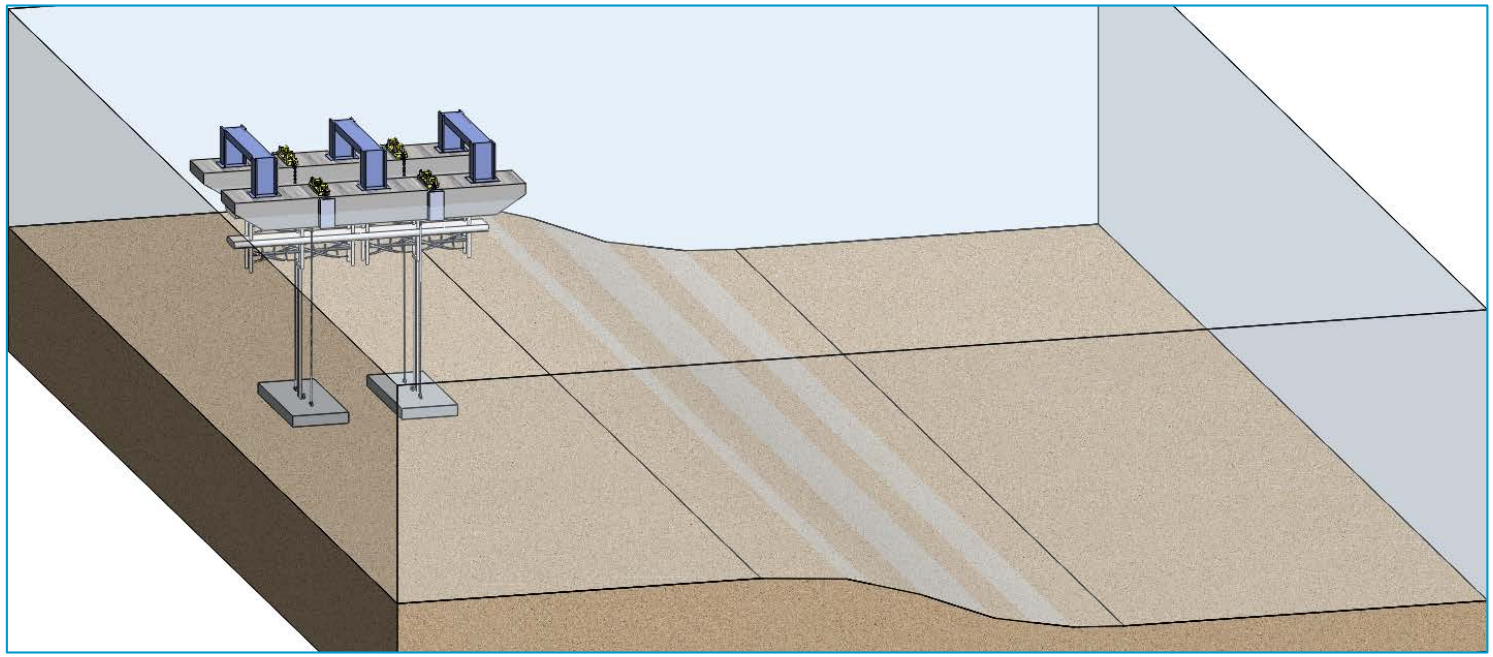

Attach device to anchors

- This will be done at low tide
- Mooring line connections will be made at surface.
- Anchor lifting line connections can be made at surface or at anchors.

ORPC
OCEAN RENEWABLE POWER COMPANY

Assembly, Installation, & Maintenance

Subsystem Installation Strategy

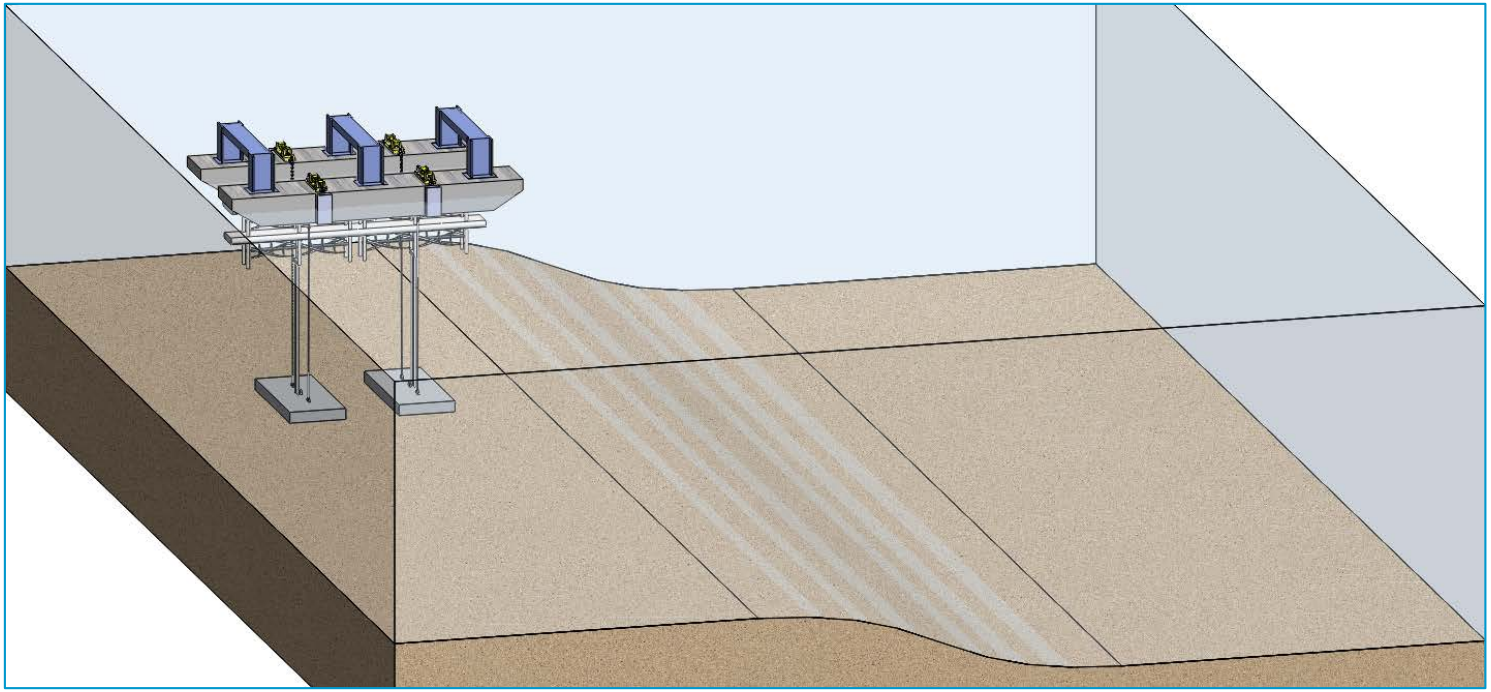

Lift anchors with tide

- Lift lines will be locked off.
- Buoyancy of device and barge will lift anchors.

ORPC
OCEAN RENEWABLE POWER COMPANY

Assembly, Installation, & Maintenance

Subsystem Installation Strategy

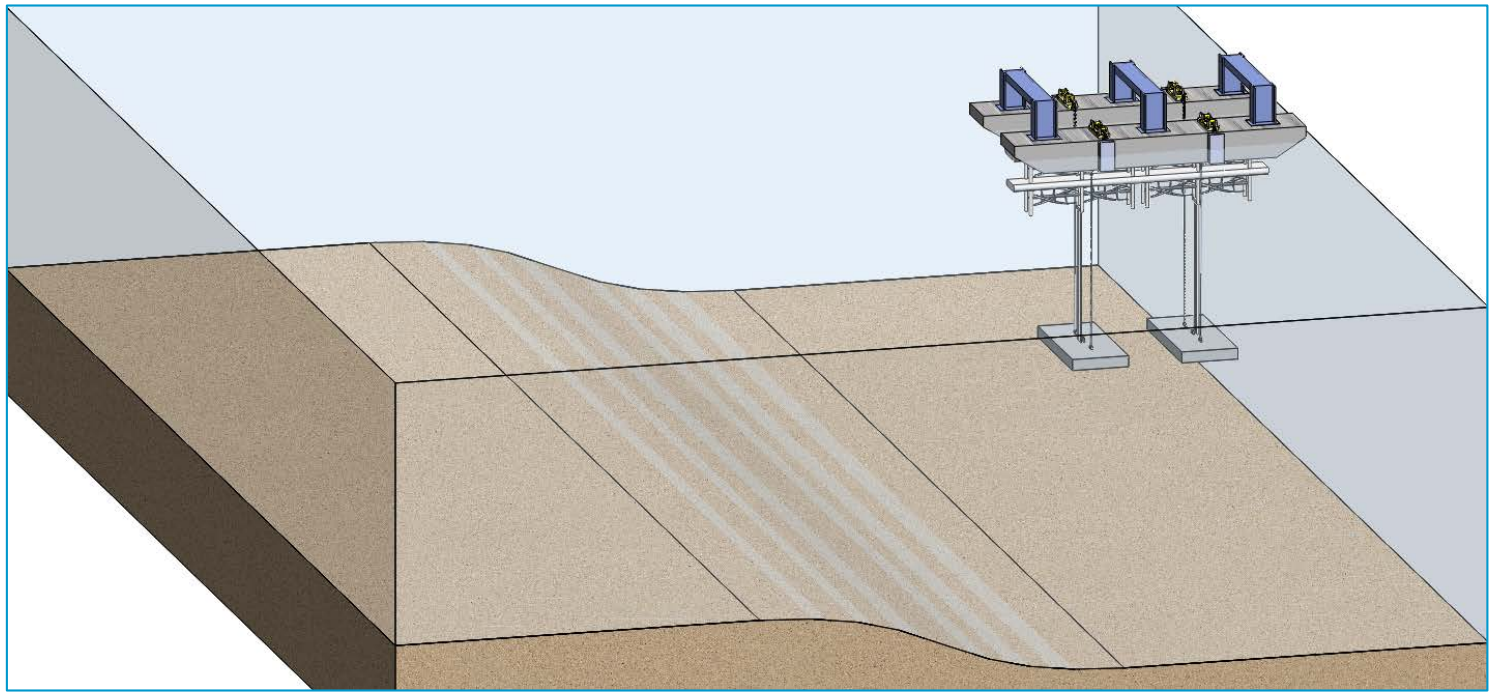

Move to deployment site

- Can use tidal flow to help with transport.
- Want to arrive at site at slack tide.

ORPC
OCEAN RENEWABLE POWER COMPANY

Assembly, Installation, & Maintenance

Subsystem Installation Strategy

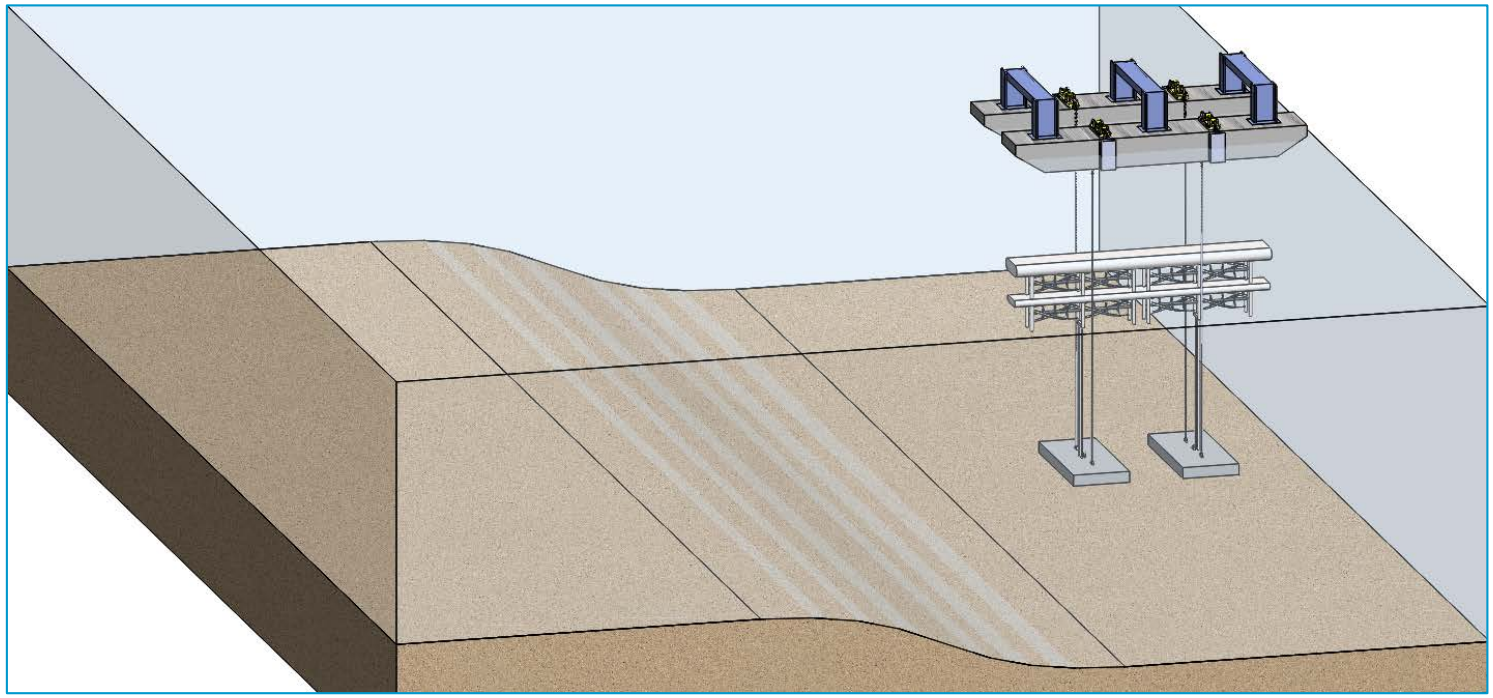

Lower device

- Chain jacks / winches will feed out chain.

ORPC
OCEAN RENEWABLE POWER COMPANY

Assembly, Installation, & Maintenance

Subsystem Installation Strategy

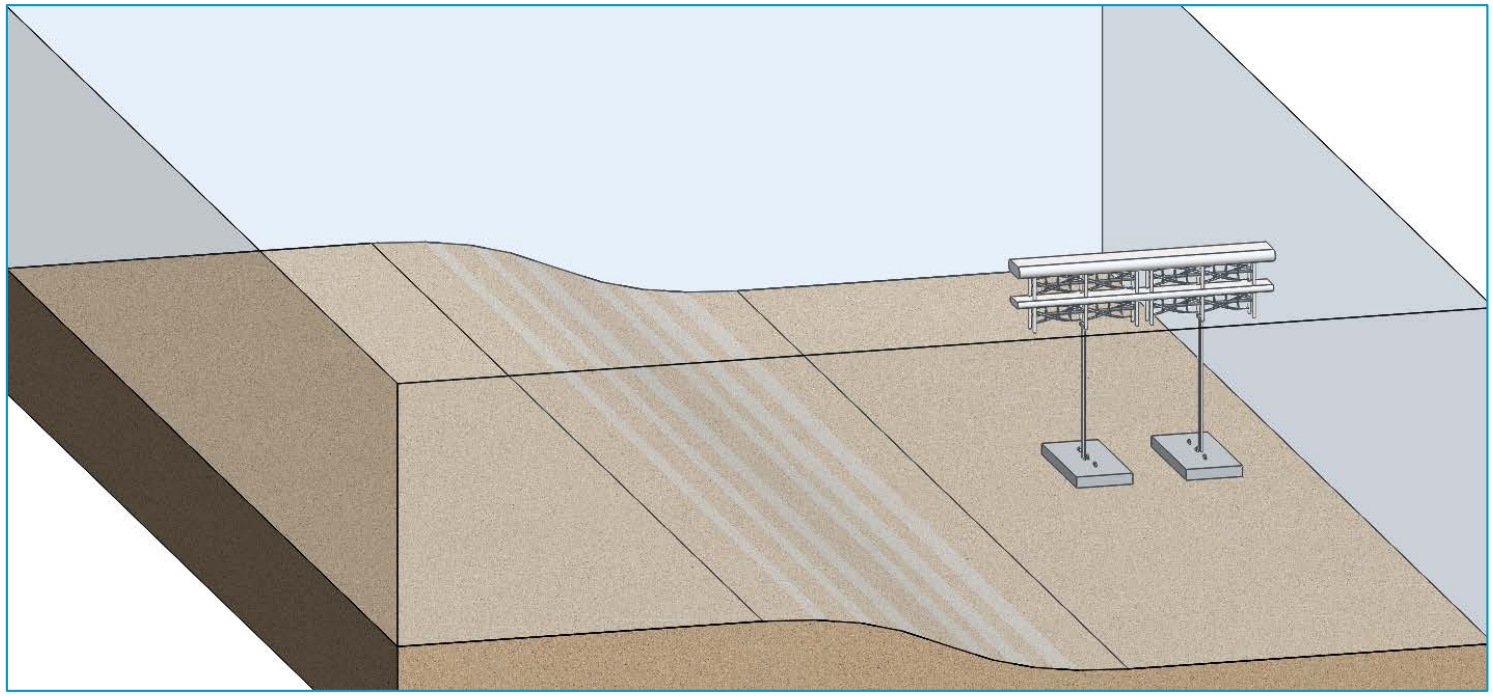

Detach and leave device

- Anchor lines will either detach from anchors at depth or at surface and then lowered to the seafloor with tag retrieval lines.

ORPC
OCEAN RENEWABLE POWER COMPANY

Validation Testing

BP2 Test Plan – Deployment

- Single turbine or RivGen® 2.0 with BTMS
- Review detachable system process, provided ROV development progresses.
- Replicate OcGen with Rigid bridle and 2 point mooring improvement

ORPC OCEAN RENEWABLE POWER COMPANY

TidGen® 2.0 CDR – Continuation Application

Driveline – Task 3

ORPC
OCEAN RENEWABLE POWER COMPANY

Driveline Overview

Functional Description & Performance

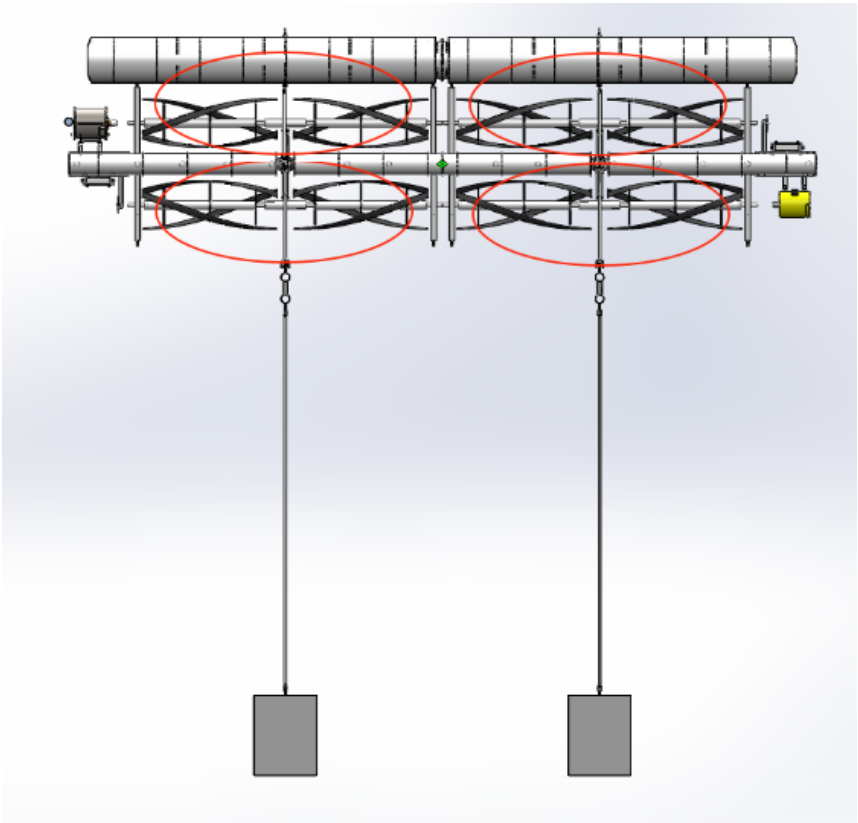

Overall Design

- Performance: >5 year life with <5% power loss.
- Driveline sections consist of two turbine pairs – 4 total.
- Overall system design concept mirrors the "PTO Driveline Test System":
  - Mid-bearing assembly constrains turbines radially and axially
  - End-bearing constrains radially and allows for axial movement and does not over-constrain.
- Turbines rows are interconnected by flexible couplings to allow for axial and radial misalignment.
- Complex loading, system flexure, combined with high-cycle count; make driveline design difficult – conservative design necessary for 20 yr life.

ORPC
OCEAN RENEWABLE POWER COMPANY

Driveline Overview

History

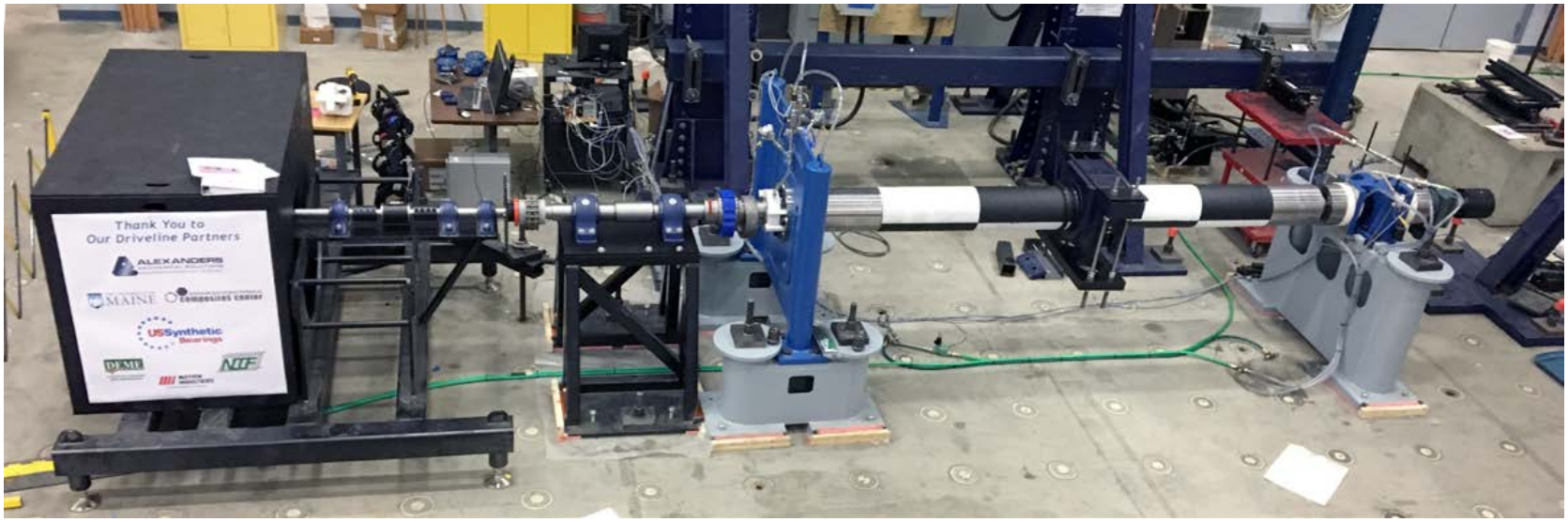

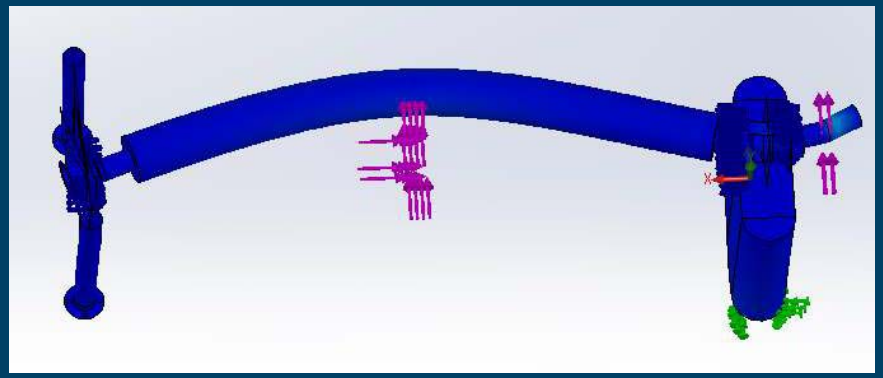

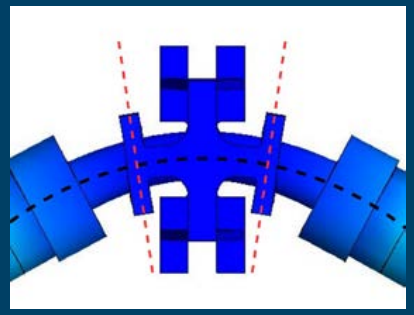

PCD Bearings Housings engineered to keep bearing contact orthogonal to shaft mid line

ORPC
OCEAN RENEWABLE
POWER COMPANY

Driveline Overview

History

- Large loads/span lead to significant deflection in cross flow turbines.
- Bearing housings designed to be rigid to transfer loads and selectively weakened to match angular deflection in shaft.

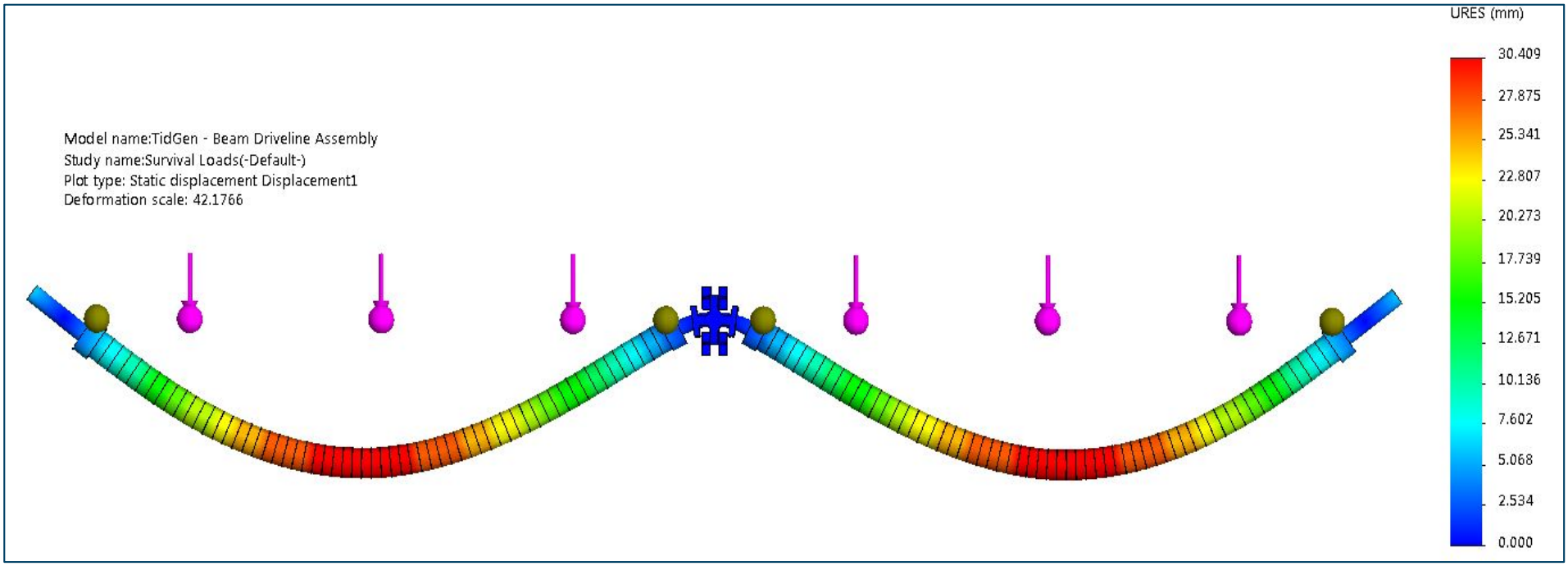

ORPC
OCEAN RENEWABLE
POWER COMPANY

Specifications & Requirements

Load Description

Driveline design is driven by fatigue. Driveline fatigue loads are highest when operating at torque limited power production mode with additional system deflection (FLS #2- Torque Limited Power Production).

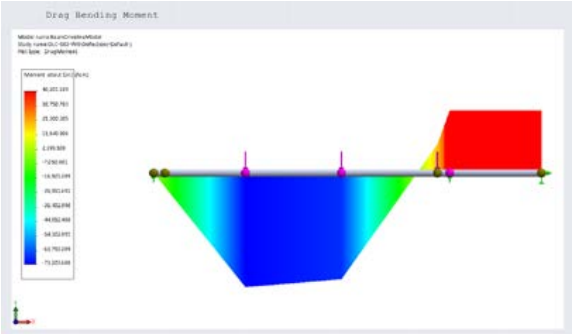

Current design loads are summarized in:
D-TD20-10053 – Driveline bending Moments

Key inputs to this document are derived from:

- D-TD20-10022 RU - TidGen 2.0 Driveline Design Loads v2
- Deflection of Structural Assembly FEA Runs 2017_11_10
- D-TD20-10035 - TidGen 2.0 Off-Axis Flow and Axial Load

ORPC
OCEAN RENEWABLE POWER COMPANY

Driveline Overview

Present Design

- Mid-Bearing Stanchion extended to reduce bending loads on center stanchion and driveline tube.
- Turbines cantilevered over bearing housing.
- Can handle asymmetric loadings

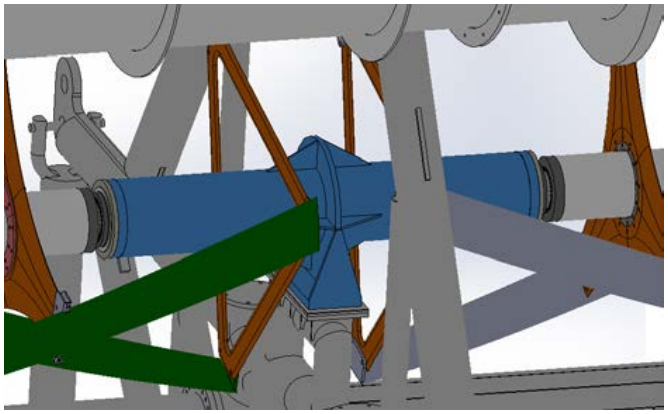

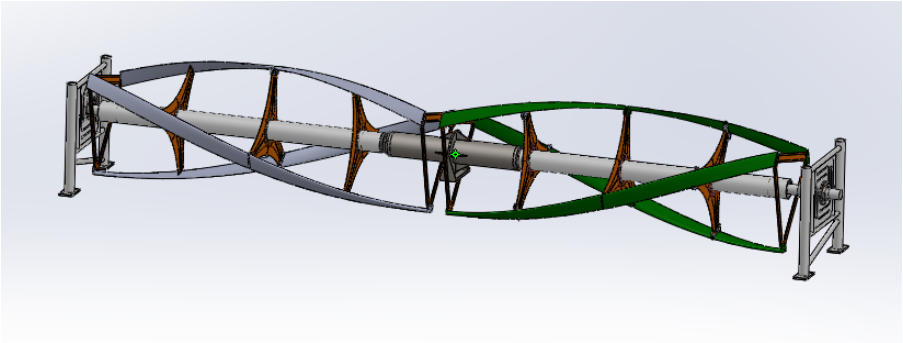

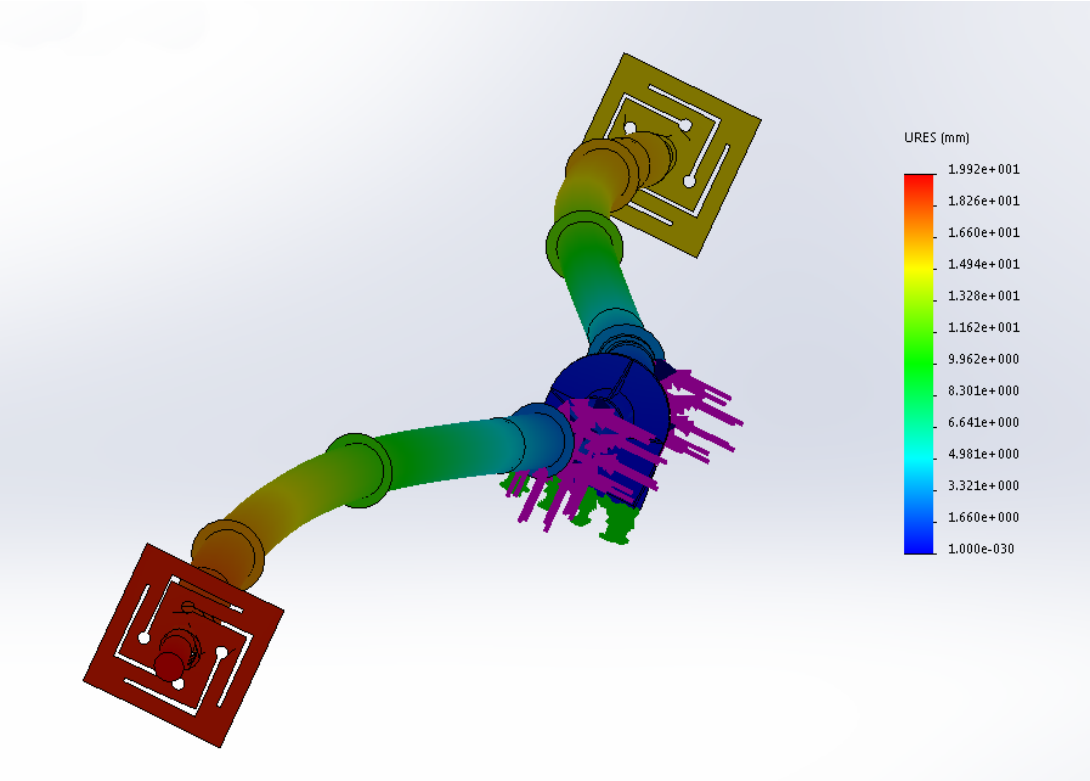

ORPC
OCEAN RENEWABLE
POWER COMPANY

Turbine Pair Interface Details

Specifications

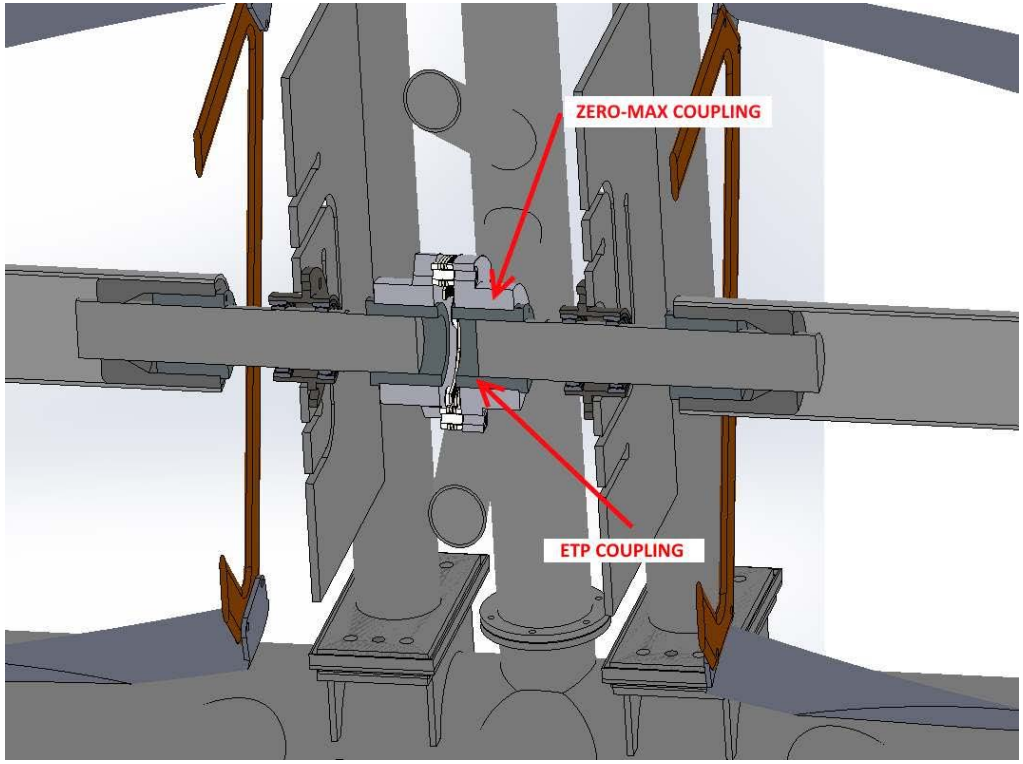

Turbine to Turbine Connection

Standard ETP and Zero Max coupling used.

Space is limited.

- 45 kNm torque rating
- 180mm Turbine Shaft
- Angular deflection and misalignment within limits.

ORPC
OCEAN RENEWABLE POWER COMPANY

Brake Interface Details

Specifications

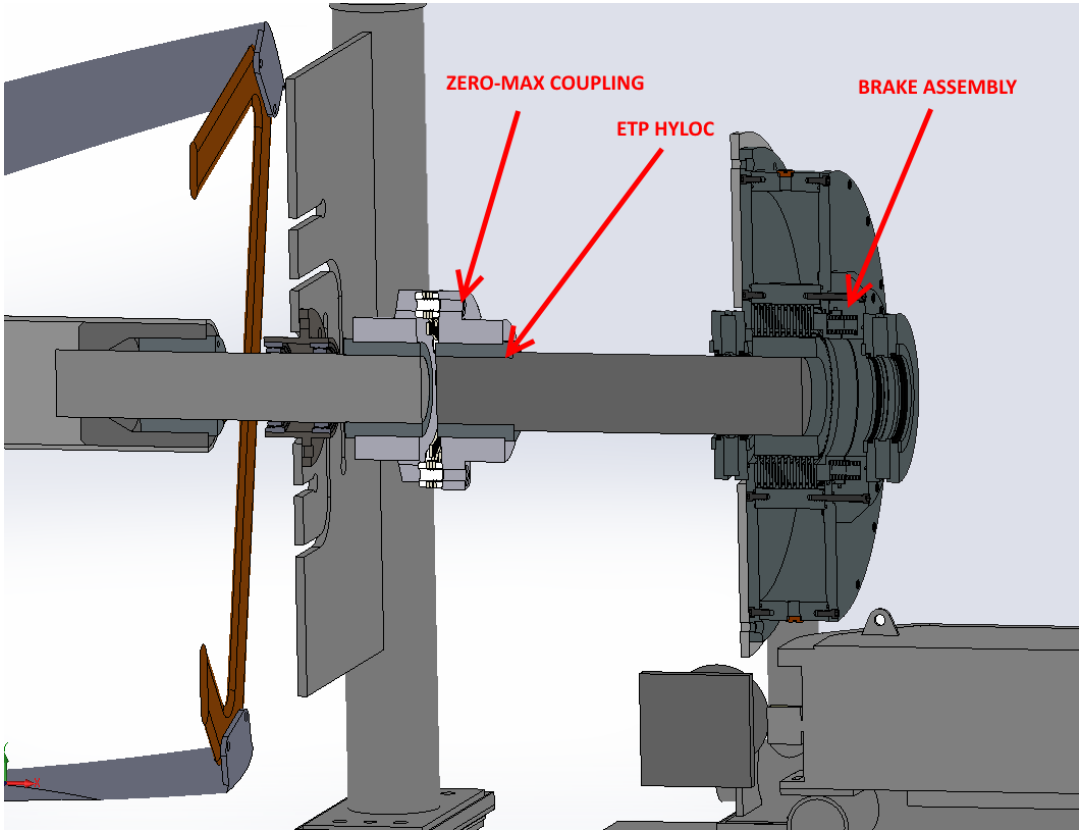

Turbine to Brake Connection

Standard ETP and Zero Max coupling used with custom interface.

Brake design is ongoing.

- 45 kNm torque rating
- 180mm Turbine Shaft
- 180mm Brake Shaft
- Angular deflection and misalignment within limits.

ORPC
OCEAN RENEWABLE POWER COMPANY

Subsystem Interface Details

Specifications

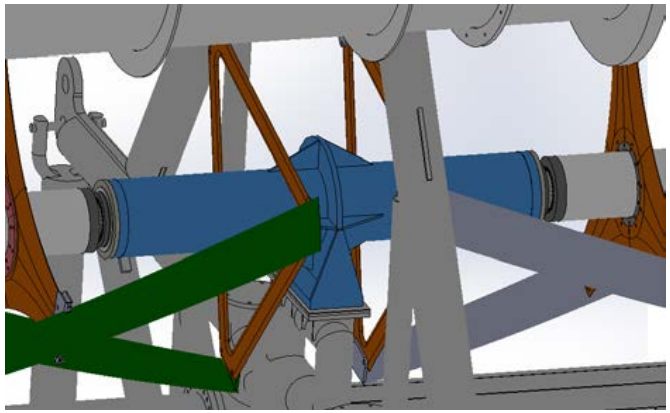

Bearing Housing Connections

Bolted interfaces that are pre-leveled with alignment features.

- Final design effort to finalize interface (number of bolts, arrangement).
- Design assumes A325 bolts.
- Chockfast decision to be made – one layer or two? Cost implications.

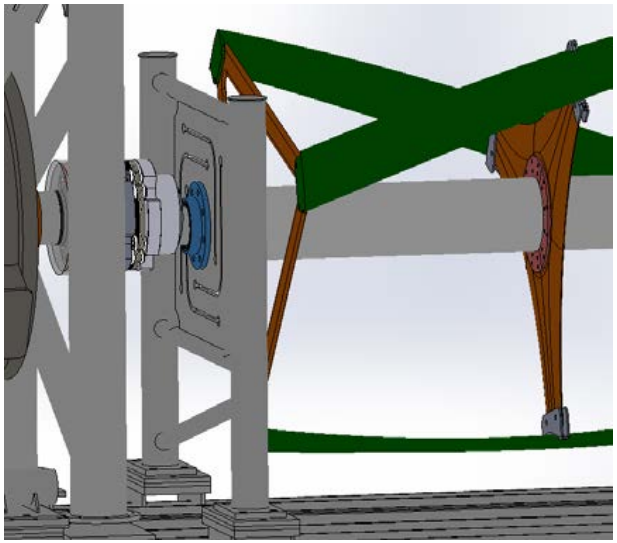

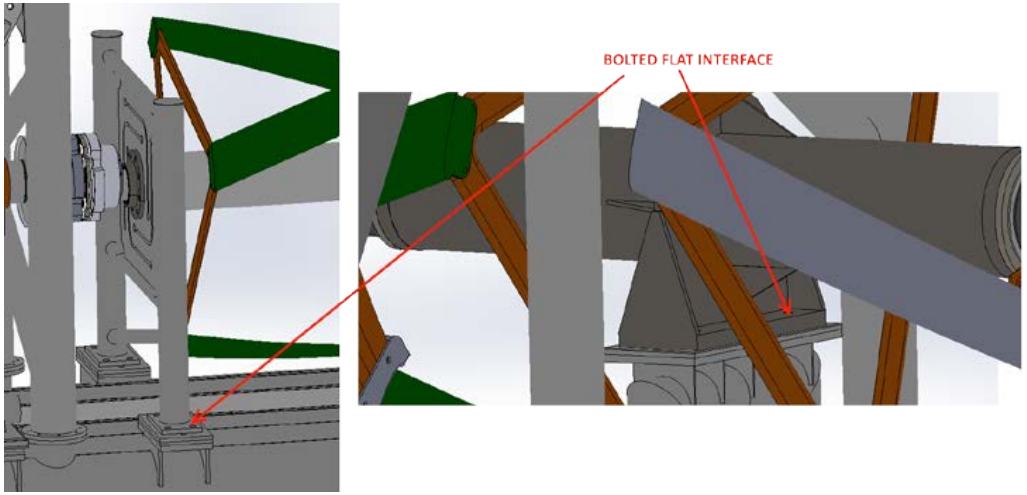

ORPC
OCEAN RENEWABLE
POWER COMPANY

Analysis Overview

Load Cases Analyzed

FLS #1- Peak Power Production
High Cycle Fatigue
U = 2.25 m/s
TSR = 2.00

FLS #2- Torque Limited Power Production
High Cycle Fatigue
U = 3.5 m/s
TSR = 3.00

FLS #2- Torque Limited Power Production
With Deflection
High Cycle Fatigue
U = 3.5 m/s
TSR = 3.00

Freewheel Operation
Survival
U = 3.5 m/s
TSR = 4.5

ORPC
OCEAN RENEWABLE
POWER COMPANY

Analysis Overview

Driveline Bending Moments D-TD20-10053

Total Per Turbine:

$$F_{drag} := \frac{1}{2} \cdot \rho \cdot U^2 \cdot A \cdot C_d \cdot Y_s = 143.4838\ kN$$

$$F_{lift} := \frac{1}{2} \cdot \rho \cdot U^2 \cdot A \cdot C_l \cdot Y_s = -19.8503\ kN$$

$$F_{axial} := F_{drag} \cdot 0.17 = 24.3922\ kN$$

Per Strut:

$$\frac{F_{drag}}{3} = 47.8279\ kN$$

$$\frac{F_{lift}}{3} = -6.6168\ kN$$

$$\frac{F_{axial}}{3} = 8.1307\ kN$$

Bearing Shaft Results:

$$Mb_{drag} := 40200\ N\,m$$

$$Mb_{lift} := 3780\ N\,m$$

$$Mb := \sqrt{Mb_{drag}^2 + Mb_{lift}^2} = 41.5766\ kN\,m$$

Turbine Shaft Results:

$$Mb_{drag} := 73200\ N\,m$$

$$Mb_{lift} := 10610\ N\,m$$

$$Mb := \sqrt{Mb_{drag}^2 + Mb_{lift}^2} = 73.2975\ kN\,m$$

Drag Bending Moment

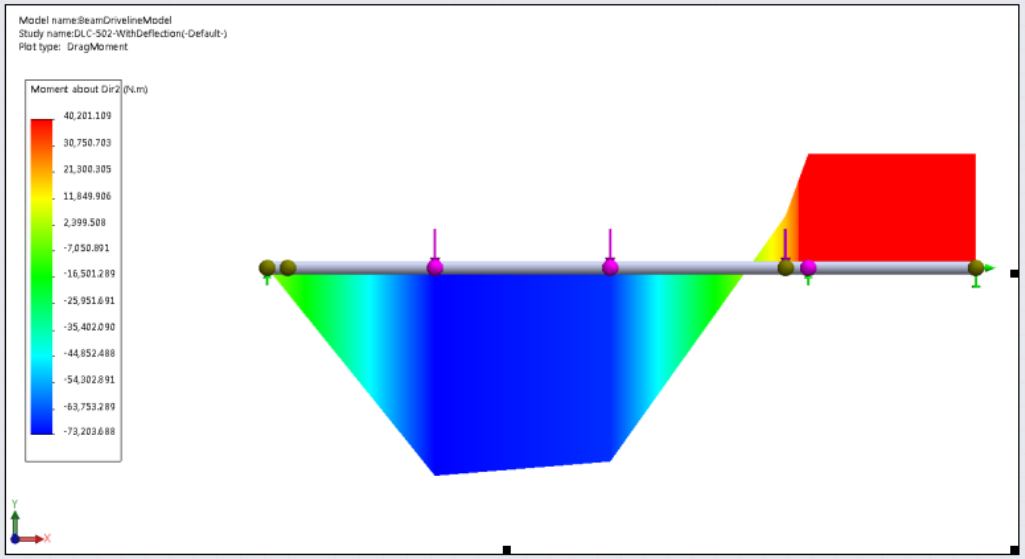

ORPC
OCEAN RENEWABLE
POWER COMPANY

Analysis Overview

Bearing Surface Pressure Check

D-TD20-10058
PCD BEARING FORCE CALCULATION

Torque Limited

End Bearings:
7.7x above failure pressure.

Mid Bearings:
4.1x above failure pressure.

Freewheel

End Bearings:
3.1x above failure pressure.

Mid Bearings:
2.0x above failure pressure.

Diameter could be reduced.

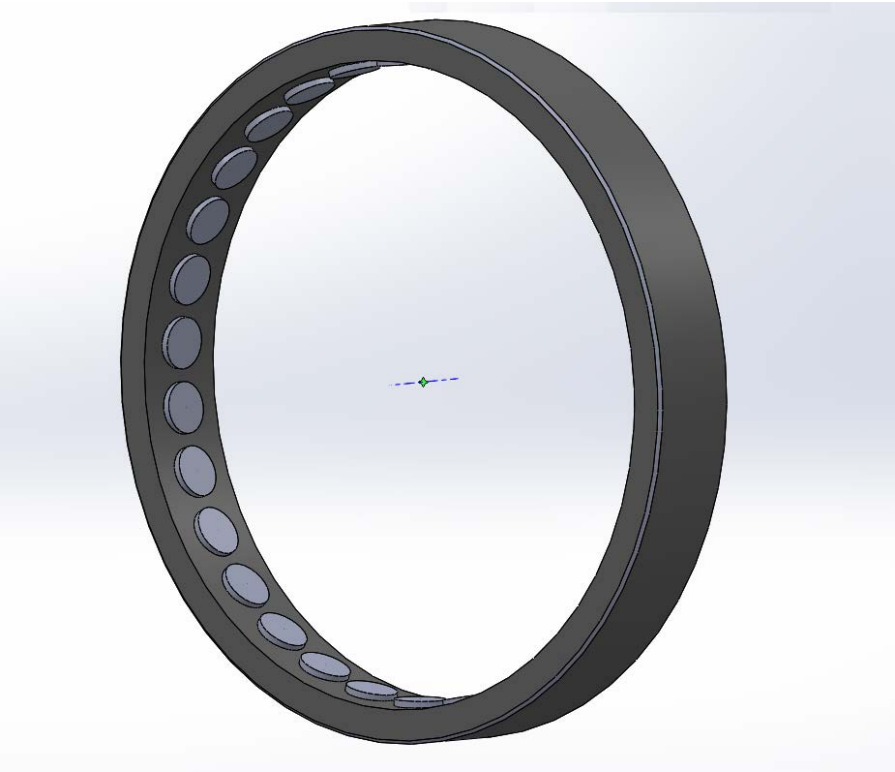

ORPC
OCEAN RENEWABLE
POWER COMPANY

Analysis Overview

Driveline Component Analysis

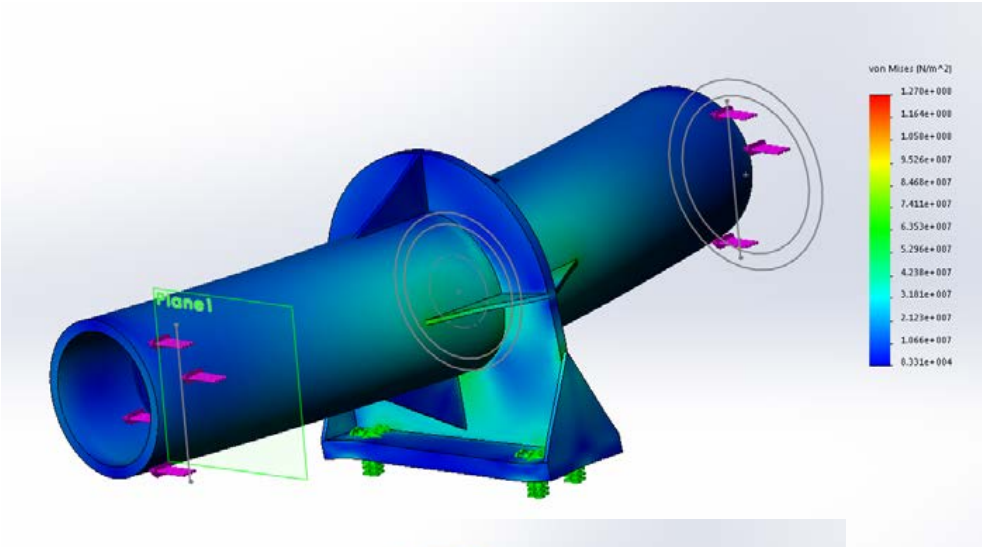

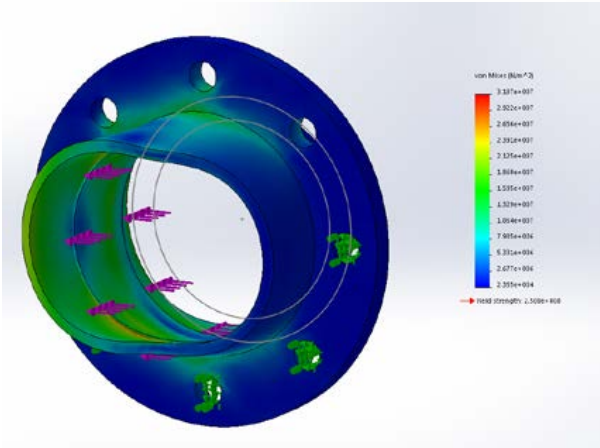

FEA Analysis

Bearing housings have been reviewed, pass initial screens for strength under freewheel operation.

ORPC
OCEAN RENEWABLE
POWER COMPANY

Corrosion Protection

Corrosion protection strategy - PCD Bearings

PCD Bearing at highest risk for failure from corrosion.

Epoxy coating was effective at limiting zinc corrosion.

Further testing should be performed to confirm coating capabilities.

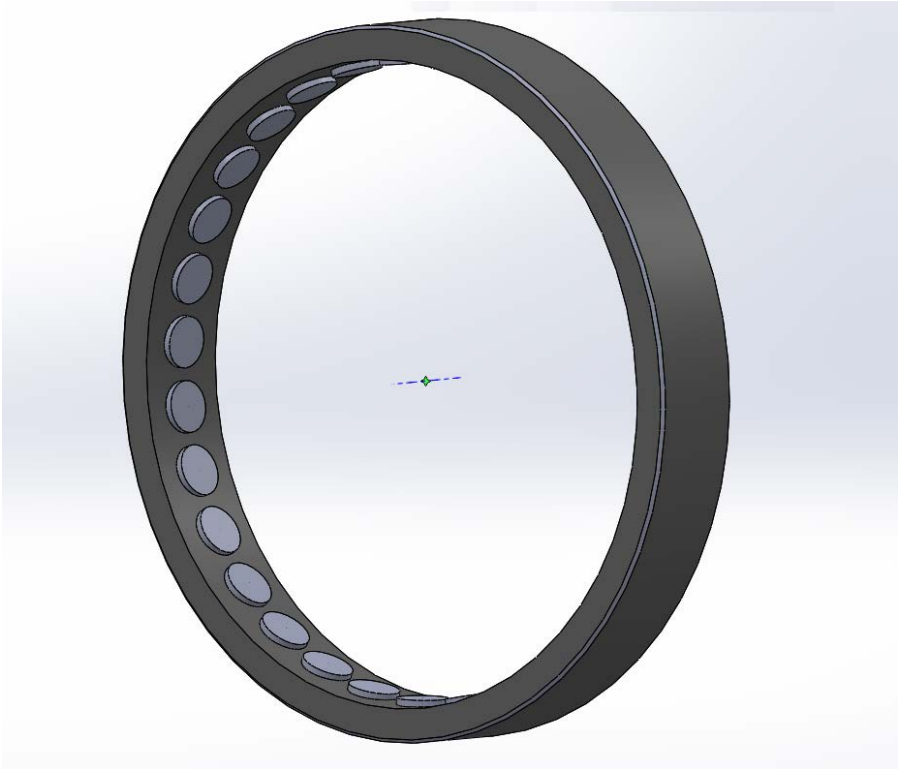

ORPC
OCEAN RENEWABLE POWER COMPANY

Corrosion Protection

Corrosion protection strategy - PCD Bearings

Remainder of system will utilize traditional epoxy coating system and supplemental cathodic protection.

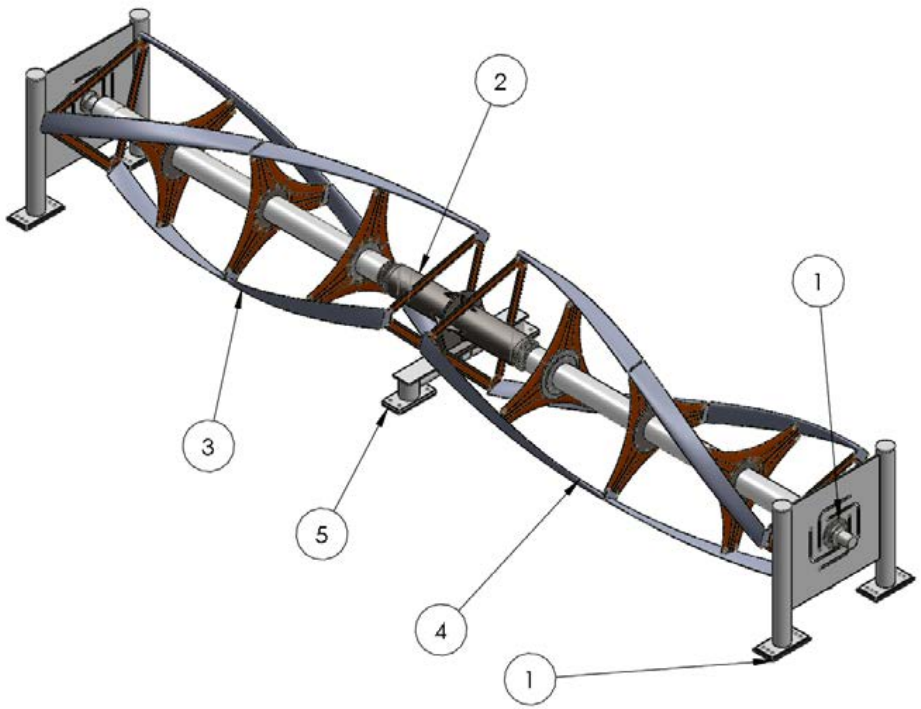

ORPC
OCEAN RENEWABLE
POWER COMPANY

TidGen® 2.0 CDR – Continuation Application

Electrical and Control System – Tasks 3 and 4

ORPC
OCEAN RENEWABLE POWER COMPANY

Condition Monitoring System

- Enclosure Temperature and Humidity (leaks and electronics)
- Mooring line tension
- Bearing temperatures
- Buoyancy pod leaks
- Device position
- Water velocity

ORPC
OCEAN RENEWABLE POWER COMPANY

Theory of Operation

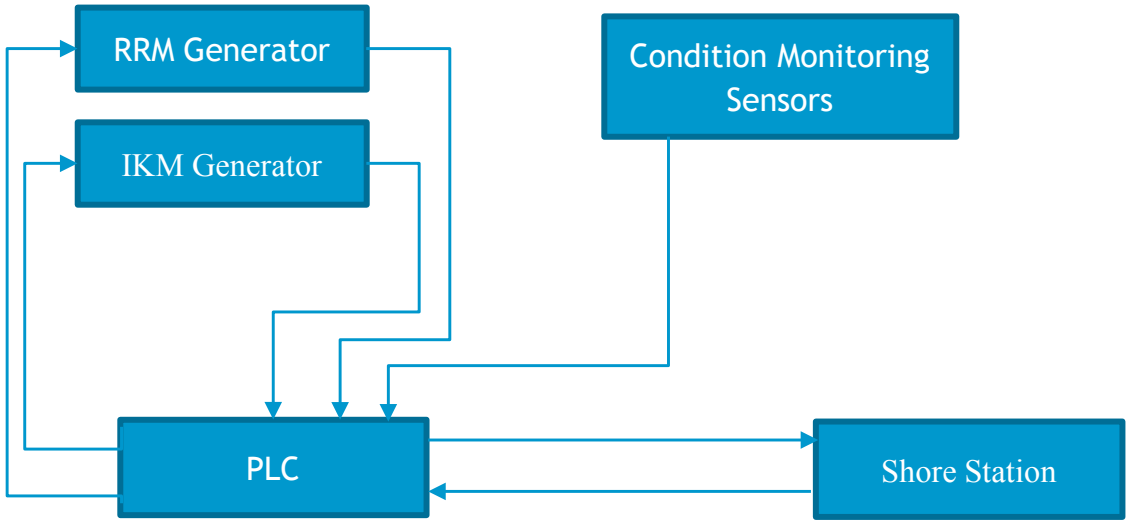

- Onboard PLC serves as condition monitoring system (CMS) and control
- Shore station sends commands to device, but device is capable of autonomous operation
- PLC handles fault monitoring, automatic shutdowns based on CMS inputs

ORPC
OCEAN RENEWABLE POWER COMPANY

Power Curve

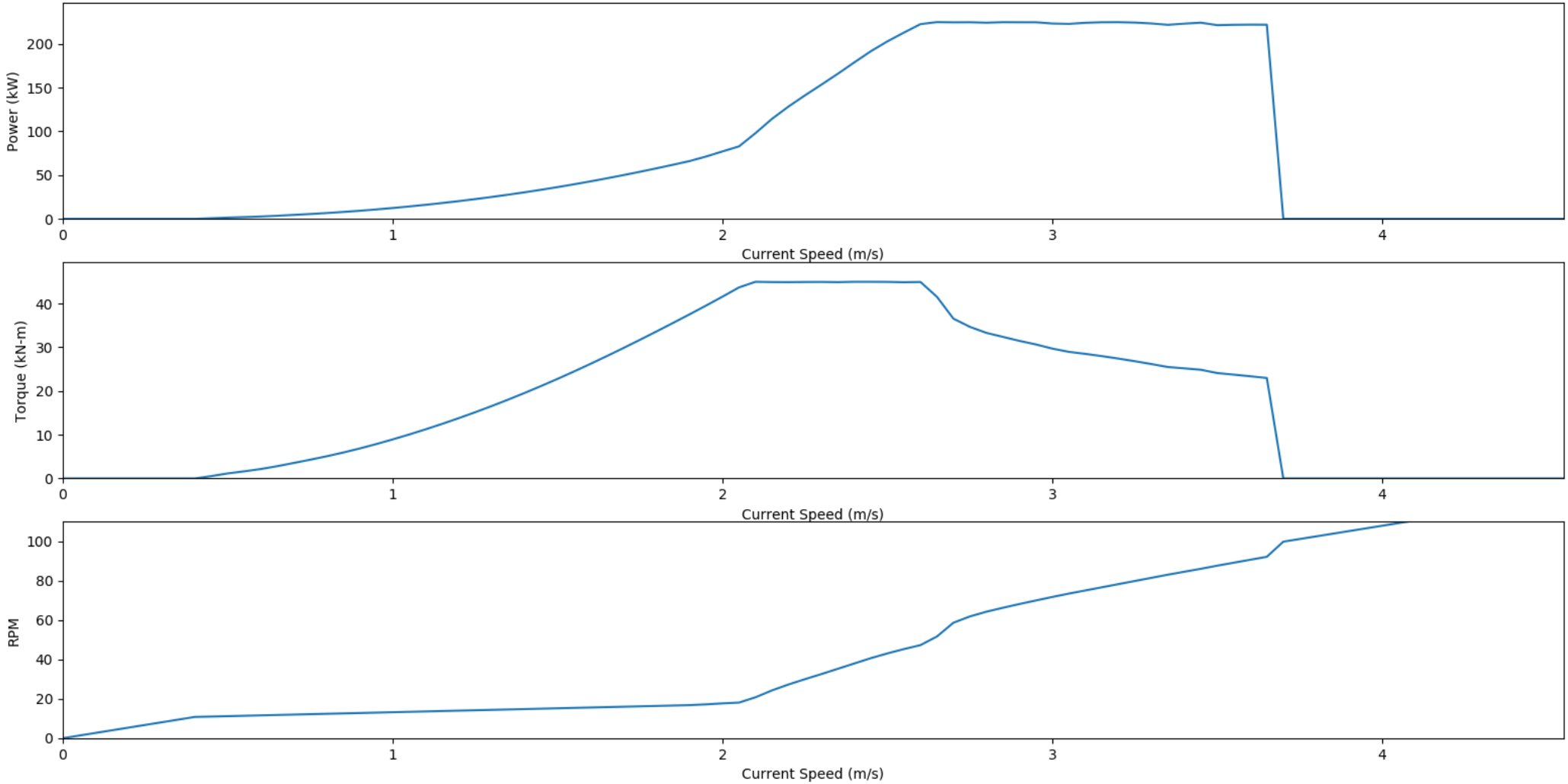

ORPC
OCEAN RENEWABLE
POWER COMPANY

REVISIONS					
REV.	DESCRIPTION	DATE	DRAWN	CHK	APP
-		-TBD-	-TBD-	-TBD-	-TBD-

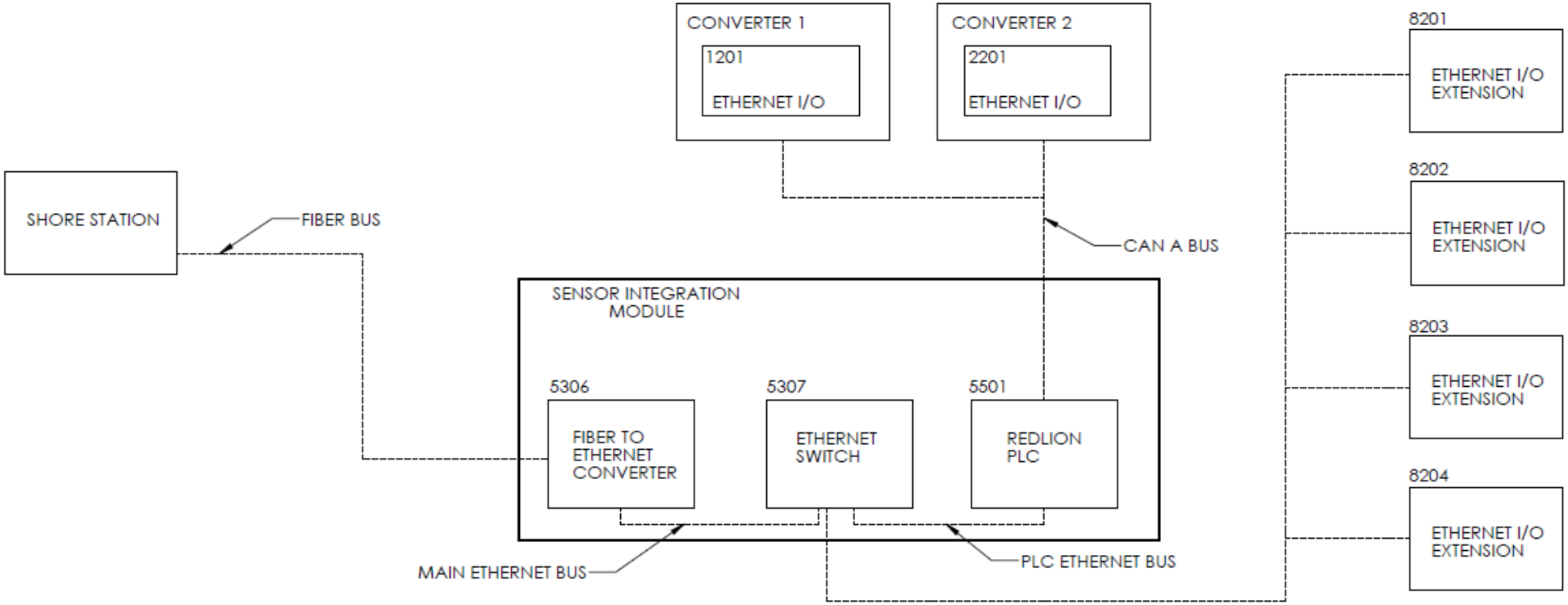

UNLESS OTHERWISE SPECIFIED:		NAME	DATE
DIMENSIONS ARE IN MM TOLERANCES: ANGULAR: ±1° X ±0.5 X.X ±0.2 X.XX ±0.1	DRAWN		
	CHECKED		
	ENG APPR.		
MATERIAL			
FINISH			
DO NOT SCALE DRAWING			

ORPC OCEAN RENEWABLE POWER COMPANY
254 COMMERCIAL ST.
SUITE 119B
PORTLAND, ME 04101
USA
(207) 772-7707

TITLE:

SIZE	DWG. NO.	REV
B		

SCALE: 1:100 | SHEET 1 OF 1

OCEAN RENEWABLE POWER COMPANY

REVISIONS					
REV.	DESCRIPTION	DATE	DRAWN	CHK	APP
-		-TBD-	-TBD-	-TBD-	-TBD-

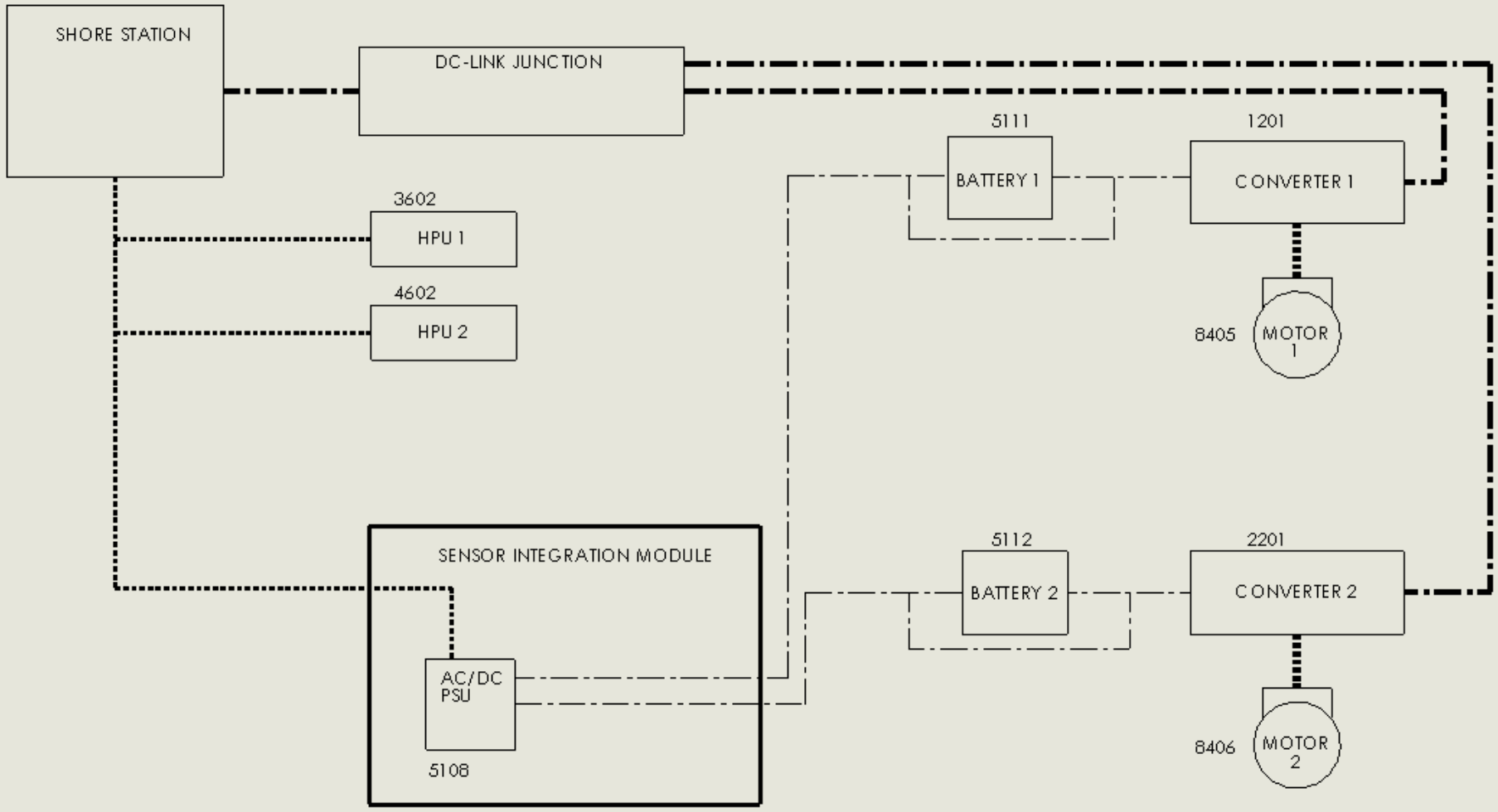

WILD AC	
230VAC	
1000VDC	
24VDC	
LINE STYLE	LINE SPEC

UNLESS OTHERWISE SPECIFIED:

DIMENSIONS ARE IN MM

TOLERANCES:
ANGULAR: ±1°
X ±0.5
X.X ±0.2
X.XX ±0.1

MATERIAL

FINISH

DO NOT SCALE DRAWING

	NAME	DATE
DRAWN		
CHECKED		
ENG APPR		

PROPRIETARY AND CONFIDENTIAL

The drawing represents details and design features as elements of a design prepared by and for Ocean Renewable Power Company, LLC (ORPC). ORPC retains exclusive ownership of the drawing details and designs and does not to be used by any person unless prior written consent is obtained. No plans to be returned upon completion of said work.

ORPC OCEAN RENEWABLE POWER COMPANY
254 COMMERCIAL ST.
SUITE 1198
PORTLAND, ME 04101
USA
(207) 772-7707

TITLE:

SIZE B | DWG. NO. | REV

SCALE: 1:100 | SHEET 1 OF 1

Subsystem Overview

Subsystem Components

- Generator (x2)
- Converter (x2)
- SIM PSU (x1)
- UPS Module (x2)
- UPS Battery (x2)
- Shore Cable Interconnect
  - DC Contactor (x4)

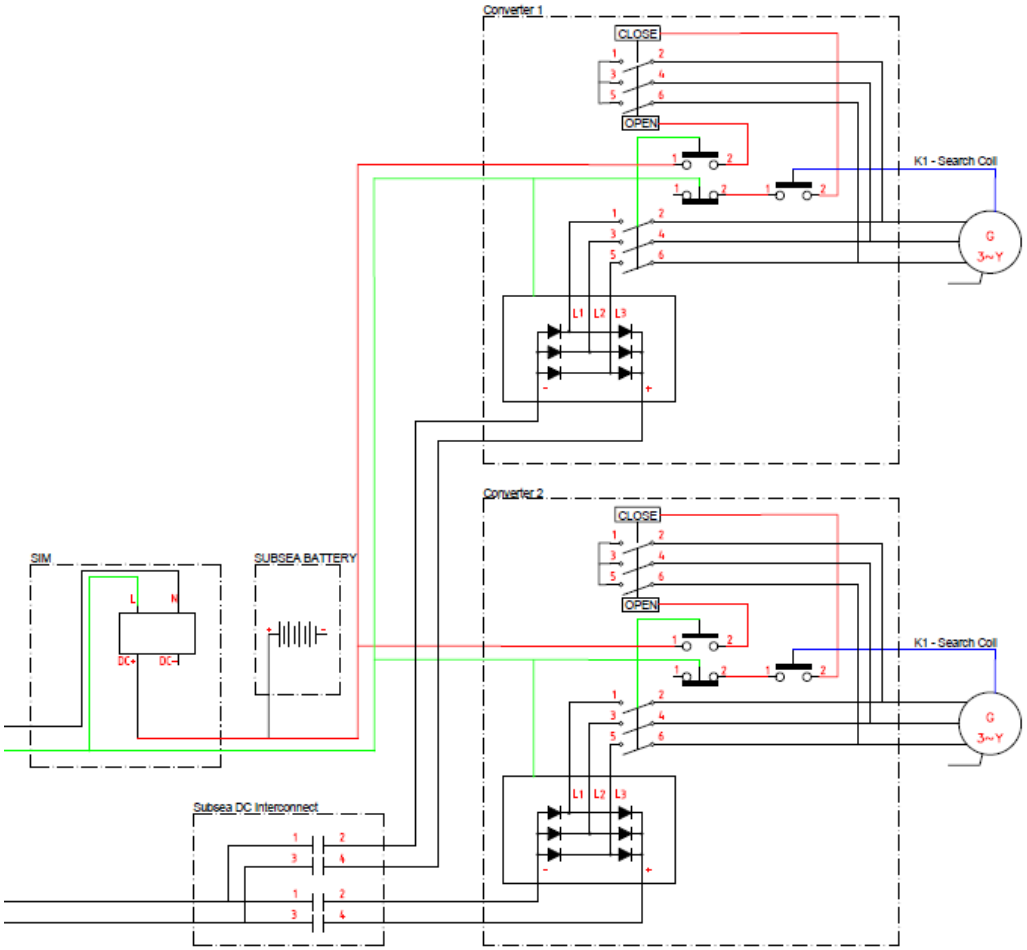

ORPC
OCEAN RENEWABLE
POWER COMPANY

Subsystem Overview

Subsystem Components

PROPRIETARY & CONFIDENTIAL

REVISIONS					
REV.	DESCRIPTION	DATE	DRAWN	CHK	APP
0		11/8/2017			

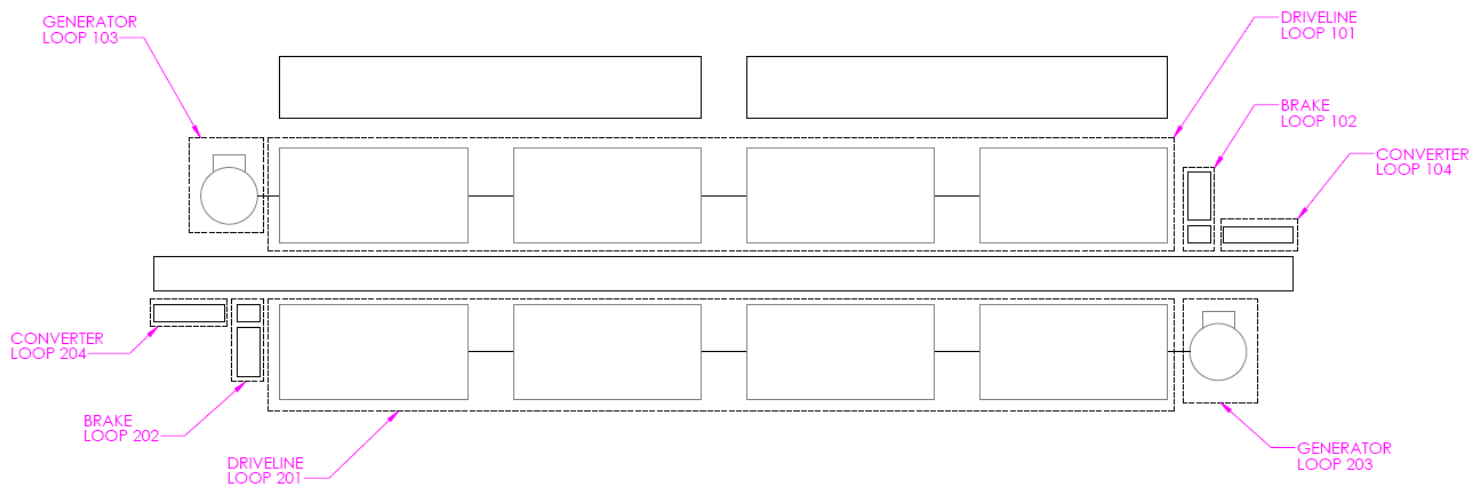

LOOP NO.	DESCRIPTION	SHEET NO.
204	TGU 2 - CONVERTER	
203	TGU 2 - GENERATOR	
202	TGU 2 - BRAKE	
201	TGU 2 - DRIVELINE	
104	TGU 1 - CONVERTER	
103	TGU 1 - GENERATOR	
102	TGU 1 - BRAKE	
101	TGU 1 - DRIVELINE	
007	SHORE STATION	
006	SENSOR INTEGRATION MODULE	
005	DC-LINK JUNCTION BOX	
002	ENVIRONMENTAL DATA	
001	DEVICE POSITION AND STRUCTURAL INTEGRITY	

LOOPS NOT SHOWN:
001 - DEVICE POSITION AND STRUCTURAL INTEGRITY
002 - ENVIRONMENTAL DATA
005 - DC-LINK JUNCTION BOX
006 - SENSOR INTEGRATION MODULE
007 - SHORE STATION

UNLESS OTHERWISE SPECIFIED:
DIMENSIONS ARE IN MM
TOLERANCES:
ANGULAR: ±1°
X ±0.5
X.X ±0.2
X.XX±0.1
MATERIAL
FINISH
DO NOT SCALE DRAWING

	NAME	DATE
DRAWN		
CHECKED		
ENG APPR.		

PROPRIETARY AND CONFIDENTIAL

This drawing represents details and design features as elements of a design prepared by and for **Ocean Renewable Power Company, LLC** (ORPC). ORPC retains exclusive ownership of the drawing, details and designs and are not to be used by any person, unless prior written consent is obtained. This plan is to be returned upon completion of said work.

ORPC OCEAN RENEWABLE POWER COMPANY
254 COMMERCIAL ST.
SUITE 1198
PORTLAND, ME 04101
USA
(207) 772-7707

TITLE:

SIZE	DWG. NO.	REV
B		0

SCALE: 1:100 SHEET 3 OF 16

ORPC OCEAN RENEWABLE POWER COMPANY

Specifications & Requirements

Power & Data Cable

Power Cable
- 2km Length
- Minimum 300kcmil
- Pair of armored single conductor

Control and Data
- 2km Length
- #6 AWG 240VAC
- 2 Pair single mode fiber optic

Transmission line is low cost, low flexibility cable (2km)
Transmission to device cable is higher cost, high flexibility (120m)

ORPC
OCEAN RENEWABLE POWER COMPANY

Specifications & Requirements

Power Cable

Conductor Size	Energy Loss	Revenue Loss
300 kcmil	8.6%	$12,615
500 kcmil	5.1%	$9,345
750 kcmil	3.4%	$4,985

**Annualized losses at $0.22/kwh*

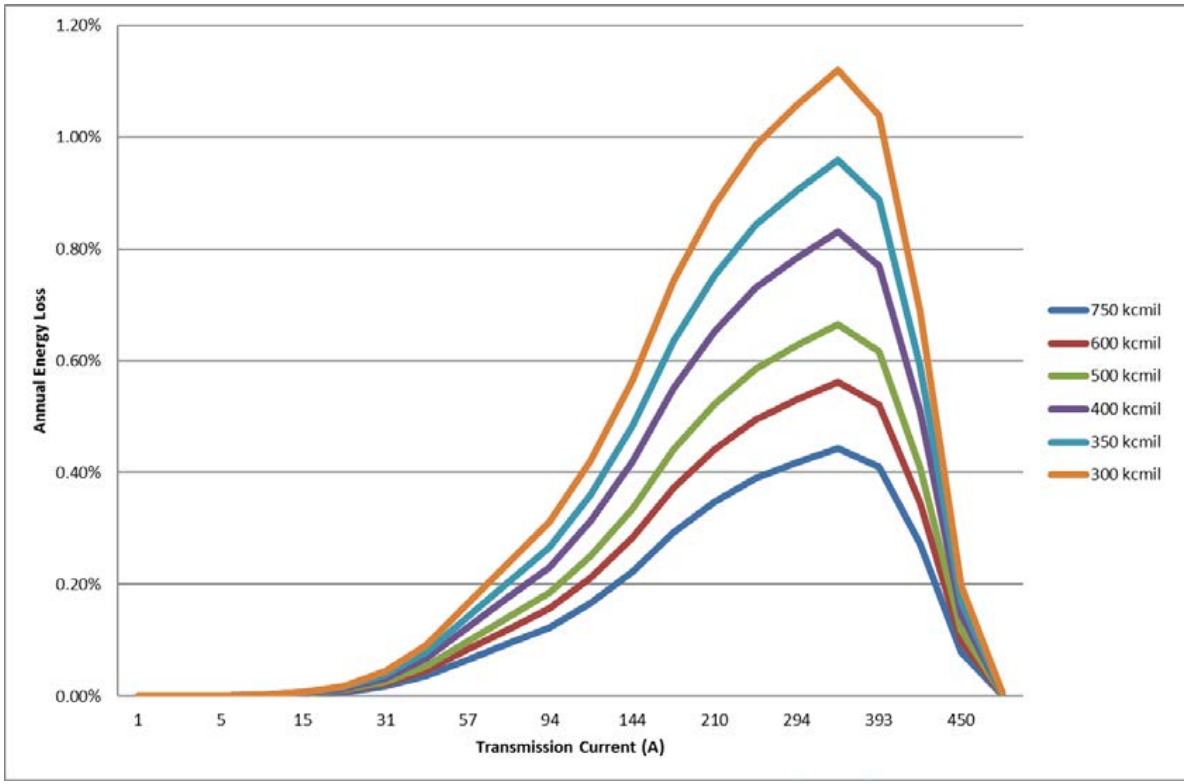

ORPC
OCEAN RENEWABLE POWER COMPANY

Subsystem Cost

Estimated fabrication cost

Sensors	$67,932.31
Sensor Cabling	$17,770.00
Equipment	$14,121.08
Equipment Cabling	$4,050.00
Data cable	$609,000.00
Power Cable	$611,906.50
TOTAL INSTRUMENT	**$103,873.39**
TOTAL P&D	**$1,324,779.89**

NOTE Does not include cost of installation

ORPC
OCEAN RENEWABLE POWER COMPANY

Validation Testing

- Bench testing of components
- Integration of electrical system before deployment
- Communications tests with full cable or cable length simulator
- With TidGen® 2.0 delay, utilize SCADA architecture on RivGen® 2.0
- Early bench and systems tests on smaller system
- Scale up and include improvements.

ORPC
OCEAN RENEWABLE POWER COMPANY

Thank you!

ORPC
OCEAN RENEWABLE
POWER COMPANY